United States Department of the Interior
National Park Service

National Register of Historic Places Registration Form

This form is for use in nominating or requesting determinations for individual properties and districts. See instructions in National Register Bulletin, *How to Complete the National Register of Historic Places Registration Form.* If any item does not apply to the property being documented, enter "N/A" for "not applicable." For functions, architectural classification, materials, and areas of significance, enter only categories and subcategories from the instructions.

1. Name of Property

Historic name: ___MacDonald Pass Airway Beacon _____
Other names/site number: __24PW1093_____
Name of related multiple property listing**:**
_____
(Enter "N/A" if property is not part of a multiple property listing

2. Location

Street & number: _U.S. Highway 12, 12 miles west of Helena on MacDonald Pass__
City or town: _Helena_____ State: ___MT_____ County: ___Powell_
Not For Publication: [ ] Vicinity: [X]

3. State/Federal Agency Certification

As the designated authority under the National Historic Preservation Act, as amended,

I hereby certify that this _x_ nomination ___ request for determination of eligibility meets the documentation standards for registering properties in the National Register of Historic Places and meets the procedural and professional requirements set forth in 36 CFR Part 60.

In my opinion, the property _x_ meets ___ does not meet the National Register Criteria. I recommend that this property be considered significant at the following level(s) of significance:

___national _X__statewide ___local

Applicable National Register Criteria:

_X_A ___B _X_C ___D

Signature of certifying official/Title: **Date**

_____

State or Federal agency/bureau or Tribal Government

In my opinion, the property ___ meets ___ does not meet the National Register criteria.

Signature of commenting official: **Date**

Title : **State or Federal agency/bureau or Tribal Government**

4. National Park Service Certification

I hereby certify that this property is:

___ entered in the National Register

__ determined eligible for the National Register

___ determined not eligible for the National Register

___ removed from the National Register

___ other (explain:) _____

Signature of the Keeper Date of Action

5. Classification

Ownership of Property

(Check as many boxes as apply.)

Private: ☐

Public – Local ☐

Public – State ☒

Public – Federal ☒

Category of Property

(Check only **one** box.)

Building(s) ☐

District ☐

Site ☐

Structure ☒

Object ☐

Number of Resources within Property
(Do not include previously listed resources in the count)

Contributing	Noncontributing	
1		buildings
1		sites
1		structures
		objects
3	0	Total

Number of contributing resources previously listed in the National Register N/A

6. Function or Use
Historic Functions
(Enter categories from instructions.)

TRANSPORTATION/air-related = navigational aid

Current Functions
(Enter categories from instructions.)

TRANSPORTATION/air-related = navigational aid

7. Description

Architectural Classification
(Enter categories from instructions.)
No Style

Materials: (enter categories from instructions.)
Principal exterior materials of the property:
METAL: Steel
WOOD: Weatherboard
CONCRETE

Narrative Description
(Describe the historic and current physical appearance and condition of the property. Describe contributing and noncontributing resources if applicable. Begin with **a summary paragraph** that briefly describes the general characteristics of the property, such as its location, type, style, method of construction, setting, size, and significant features. Indicate whether the property has historic integrity.)

Summary Paragraph

Consisting of three features including the MacDonald Pass Airway Beacon tower, an electrical shed, and the foundation for the tower's generator house, the MacDonald Pass Airway Beacon rests in extreme eastern Powell County very near the boundary of Lewis and Clark County, Montana. Erected in 1935, the beacon serves as part of an historic, still-functioning system of lighted beacons providing guidance to aircraft pilots as they fly east and west across Montana during nighttime. The MacDonald Pass beacon functions as a critical component of the system. A metal platform surmounts the 91-foot steel tower and provides access to the revolving beacon at the top. Formerly powered by a gasoline-fueled generator housed in a shed 10 ft. west of the tower, the beacon now derives power from a Northwestern Energy power line controlled from a small electrical shed immediately adjacent to the tower. The generator and its building were likely removed in 1942. A two-track dirt road winds its way south from U.S. Highway 12 to the property. The MacDonald Pass Airway Beacon sits on land owned by the Helena National Forest; the Montana Department of Transportation's (MDT) Aeronautics Division maintains a Special Use Permit for the 0.3 acres occupied by the beacon, shed, and foundation. The MacDonald Pass Airway Beacon retains considerable integrity and the setting of the site displays little change since 1935.

Narrative Description

The MacDonald Pass Airway Beacon sits atop a granite outcrop of the Boulder Range at an elevation of 6479 ft., literally on the top of the Continental Divide. The outcrop rises about 280 ft. above the surrounding terrain. MacDonald Pass on U.S. Highway 12 runs east-west one mile to the north, and Helena, Montana lies 12 miles to the east. Although located within Powell County, the Powell County/Lewis and Clark County line occurs only 30 ft. to the east. A two-track dirt road approaches the beacon site from the north and east, providing vehicular access. The vantage of the MacDonald Pass Airway Beacon features spectacular views of the Helena Valley to the east and the Little Blackfoot River Valley to the west. The Continental Divide stretches to the north and south. The property occupies 0.3 acres of Helena National Forest land on which the MDT has held a Special Use Permit since 1935.[1]

The MacDonald Pass Airway Beacon property consists of three features: the MacDonald Pass Airway Beacon Tower, an electrical shed, and a generator house foundation.

MacDonald Pass Airway Beacon Tower (one contributing structure)

The steel tower comprised of steel angle sections riveted at the connections stands 91 ft. in height. It measures 17 ft. x 17 ft. at the base with each corner resting on a concrete footing. The tower tapers to 4 ft. x 4 ft. at its top and supports a platform. The International Derrick & Equipment Company of Columbus, Ohio erected the tower. A narrow steel ladder with arched metal safety rings attaches to the south elevation of the tower extending to the platform where the beacon is situated; a steel cable ascends vertically with the ladder. A steel angle section railing approximately 4 ft. in height encloses the 6 ft. x 6 ft. steel grate platform. A trap door on the platform's south side provides access at the top of the ladder. The revolving beacon sits atop a steel pedestal that houses the wiring. A Lexan dome, which replaced the original glass done, encloses the beacon. Smaller 500 watt lights located on the east and west sides of the platform face outward, corresponding with the air route's directionality. An electrical circuit box situated on the east of the north side of the platform attaches to the safety railing. A vertical lightning rod projects from the northeast corner of the platform. Steel cable "guys" attach to each of the four corners at approximately 2/3 of the tower's height. The east wires anchor in Lewis and Clark County. The Montana Aeronautics Commission upgraded the beacon with a pulse start lamp kit in 2011.

Electrical Shed (one contributing building)

Built circa 1935, the electrical shed stands about 4 ft. from the southwest corner of the beacon tower. The small wood frame building measures 6.5 ft. x 4.5 ft. and rests on a concrete foundation. The shed features a low-pitched gable roof sheathed in rolled asphalt. Simple drop siding and cornerboards clad the exterior walls of the building which contains the original circuit board and schedule for beacon operations. A

[1] David Alt and Donald W. Hyndman, *Roadside Geology of Montana*, (Missoula, Montana: Mountain Press Publishing Company, 1986), p. 197.

simple drop siding entry door faces to the east. Electrical lines run to the shed and then are channeled to the tower and the beacon.

Generator House Foundation (one contributing site)

The foundation for the generator house sits 5 ft. west of the electrical shed. It measures 22 ft. x 10.5 ft. Constructed in 1935, the generator house foundation served as part of the original operation of the beacon, housing the power source. The upper structure of the generator house was probably removed in 1942. The foundation aligns east-west and exhibits two 1.5 ft. x 2 ft. footings within the footprint that supported the heavy generator under the wood floor. An interior foundation wall, running north-south just west of the footings, provided additional support. Entrance to the building occurred from the south via a flight of seven, 3-foot wide, concrete steps. The west exterior foundation wall is partially collapsed. The building originally housed a Kohler generator fueled by white gasoline that provided electrical power to the 1,500 watt beacon on the tower.

Integrity

The MacDonald Pass Airway Beacon retains a high level of integrity. The beacon tower, electrical shed, and foundation sit in their original locations, and the isolation of the property provides for a strong sense of integrity of feeling, setting, and association. The property's relation to U. S. Highway 12 (U.S. 10-North in 1935) and the nearby Forest Service campground remains unchanged from the historic period. The beacon tower stands virtually as when constructed and much of the original equipment continues in use; its routine maintenance ensures its enduring operation. Its relationship to the Spokane Hills, Helena Regional Airport, and Avon beacons endures. Both the beacon tower and electrical shed display the effects of their siting in a completely exposed location. However, despite the tell-tale signs of temperature extremes and often ceaseless wind, both easily demonstrate sound integrity of workmanship, design, and materials. The removal of the upper structure of the generator house in the 1950s stands out as the only significant change to the property. The foundation, however, provides a good sense of the size and shape of the building's original footprint, enabling the property to convey a clear sense of how it appeared when the three resources all stood and operated as one functioning unit.

8. Statement of Significance

Applicable National Register Criteria
(Mark "x" in one or more boxes for the criteria qualifying the property for National Register listing.)

[X] A. Property is associated with events that have made a significant contribution to the broad patterns of our history.

[ ] B. Property is associated with the lives of persons significant in our past.

[X] C. Property embodies the distinctive characteristics of a type, period, or method of construction or represents the work of a master, or possesses high artistic values, or represents a significant and distinguishable entity whose components lack individual distinction.

[ ] D. Property has yielded, or is likely to yield, information important in prehistory or history.

Criteria Considerations
(Mark "x" in all the boxes that apply.)

[ ] A. Owned by a religious institution or used for religious purposes

[ ] B. Removed from its original location

[ ] C. A birthplace or grave

[ ] D. A cemetery

[ ] E. A reconstructed building, object, or structure

[ ] F. A commemorative property

[ ] G. Less than 50 years old or achieving significance within the past 50 years

Areas of Significance
(Enter categories from instructions.)
TRANSPORTATION

Period of Significance
_1935-1965_____

Significant Dates
__1935, 1965_____

Significant Person
(Complete only if Criterion B is marked above.)

Cultural Affiliation

Architect/Builder
__U.S. Dept. of Commerce's Bureau of Air Commerce
__A. S. Watson, builder ___

Statement of Significance Summary Paragraph (Provide a summary paragraph that includes level of significance, applicable criteria, justification for the period of significance, and any applicable criteria considerations.)

When constructed in 1935, the MacDonald Pass Airway Beacon and associated outbuildings functioned as one of the Northern Transcontinental Airway's 18 beacons strung across Montana from east to west, a critical navigational aid along the Northern Transcontinental Airway. The beacons' lights served as a critical navigational aid, by marking the air corridor between the Minneapolis and Seattle. The Northern Transcontinental Airway constituted a federally-sanctioned route to carry both passengers and air mail. The beacon guided airplanes over the Continental Divide west of Helena.

The beacon receives routine maintenance with much of the original equipment still intact and continues to operate, serving a vital function in air traffic in western Montana. The adjacent electrical shed houses the circuit panel for the beacon. The upper structure of the generator house was removed in 1942 when the beacon was connected to electrical lines crossing over MacDonald Pass. The MacDonald Pass Airway Beacon is eligible for listing in the National Register of Historic Places under Criteria A for its role in aviation history, particularly the safe navigation of small aircraft across western Montana since 1935.

The property is also eligible for listing under Criterion C as a representative of the specific technology available at the time of its construction allowing for such navigation. The MacDonald Pass Airway Beacon represents one of a small number of airway beacons still functioning in Montana and the United States. The Period of Significance starts when the beacon began operation in 1935 and continues to 1965, when the Federal Aviation Administration began the process of decommissioning the airway beacons across the state. Beginning in 1965, many of the United States' airway beacons were decommissioned as the system became obsolete because of improvements in radar and other electronic directional navigation aids for aircraft.

Narrative Statement of Significance (Provide at least **one** paragraph for each area of significance.)

The MacDonald Pass Airway Beacon is eligible for listing in the National Register of Historic Places under Criterion A as a significant component of an historic air travel corridor in western Montana. The beacon and its associated resources recount the federal development of the country's airway transportation corridors from 1926 to 1938. Between 1926 and 1938, the U.S. Department of Commerce's Bureau of Air Commerce created 18,000 miles of airway corridors in the United States and installed 1,550 airway beacons marking the corridors for night flying. The establishment of the airway corridors signaled a profound event in the evolution of the nation's air transportation system. The MacDonald Pass beacon served as a component of the federal Northern Transcontinental Airway Route between New York City and Seattle, Washington. Established in 1934, the route provided important air connections along the northern tier of states. The federal government authorized Northwest Airlines to utilize the route between Minneapolis-St. Paul, Minnesota and Seattle in 1932. Northwest Airlines flew both mail and passengers along the airway.[2]

In Montana, construction of the beacons on the airway began in the winter of 1934 and ended in November 1935 with the lighting of the last beacon on MacDonald Pass west of Helena. The installation of 18 airway beacons marked this major east-west route, and a total of 39 beacons served the multiple airways that crisscrossed the state. Although the decommission of most of the beacons transpired by 1972, the Montana Aeronautics Division of the Montana Department of Transportation still operates and maintains 17 airway beacons in the mountainous regions of western and central Montana, including the MacDonald Pass Beacon.

The MacDonald Pass Airway Beacon also demonstrates significance under Criterion C as a rare operating example of the airway beacons designed and built by the federal government from the mid-1920s to the mid-1930s. The Federal Aviation Administration decommissioned most of the national airway beacon system in the 1960s due to obsolescence. Montana, however, retained most of its beacons and 17 remain operational in 2014.[3] The beacon found at the MacDonald Pass represents the standard federal airway beacon design utilized between 1925 and 1936. The beacon tower remains intact with no changes to its

[2] The number of airway beacons in the United States peaked in 1937 at 22,319. Correspondence, Mike Rogan, Montana Aeronautics Division, 3 September 2013.

[3] Nine of the operational beacons are located on the old Northern Transcontinental Airway route.

design. Although replaced in 2011, the beacon surmounting the top of the tower continues to function in its historic capacity; no changes occurred to the course lights on the tower.[4] The electrical shed remains standing and virtually unchanged, and, like the tower, functions in its original capacity.

Generator houses served as a key component of the beacon system when established in 1925 and continuing through the 1930s. Through the 1940s and 1960s, however, the generators became unnecessary as power lines began to supply power to the beacons resulting in the removal of the generators and many of the sheds. The MacDonald Pass beacon generator house became a casualty of the new means to provide power to the beacons, likely removed in 1942.[5] The only reminder of the generator house remains the mostly-intact foundation. However, despite the removal of the generator house's upper structure, the presence of the tower, electrical shed, and generator house foundation provides a clear sense of the original operation of the beacon.

History

MacDonald Pass

Since Helena's early history, MacDonald Pass provided a significant transportation route over the Continental Divide west of the Capital City. MacDonald Pass was originally part of a toll road referred to as the Frenchwoman's Road. Established in 1866 by French-Canadian Constant Guyot, the route over the pass provided a more direct route to the Deer Lodge Valley from Helena than nearby Mullan Pass. Guyot obtained a license from the Territorial Legislature despite the misgivings of Governor Green Clay Smith, who opposed the road as an example of the problems plaguing the toll road system as a whole in Montana Territory.[6] Despite the governor's concerns, the legislators almost unanimously approved Guyot's petition and granted him a license to operate the toll road.[7]

Guyot's toll road opened in late November 1867. An advertisement in the Deer Lodge *Weekly Independent* advertised it as "The most direct route from Deer Lodge City . . . to HELENA." Like many toll roads in the 1860s, the tollgate also included accommodations for travelers, in this case by the "French Woman," Madame Guyot.[8] The woman's hospitality was well-known to the many travelers between Deer Lodge and Helena making the stop a popular place between Helena, Deer Lodge, and

---

[4] E-mail communication with Mike Rogan, Montana Aeronautics Division, November 27, 2013.

[5] Evidence suggests the MacDonald Pass Airway Beacon was connected to a Montana Power Company power line in 1942. That year, the Montana Highway Department's MacDonald Pass Section House (24LC2241) was connected to the power line. The section house is located about one mile east of the beacon. Helena National Forest Special Use Permit: Permission to Construct Power Line (3 October 1941). On file at the Montana Department of Transportation. Helena, Montana.

[6] Smith voiced concerns about granting licenses with no assurance that road maintenance would actually occur, and that tolls charged were reasonable. Smith was also appalled that Guyot wanted to start charging tolls before the road was completed. *Laws of the Territory of Montana Passed at the Third Session of the Legislature Beginning November 5, 1866 and Ending December 15, 1866*, (Virginia City, Mont. Territory: John P. Bruce Public Printer, 1866), pp. 56, 135-36.

[7] Patricia M. Ingram. Historic Transportation Routes Through Southwestern Montana, Report prepared for the Western Interstate Commission for Higher Education (Dillon, Montana: Bureau of Land Management, 1976), 62; *Laws of the Territory of Montana Passed at the Third Session*, p. 145.

[8] Information about Mrs. Guyot is somewhat meager. No known photographs are known to exist of her or her tenure in Montana Territory between the poll enumeration in 1864 and the territory's first federal census in 1870. Consequently, even her first name is lost to history. Jon Axline, "Frenchwoman's Road Toll Road," *Helena Independent Record* June 10, 1999).

Missoula until her murder in August 1868; authorities never solved the crime but suspicion fell on her husband, who fled the territory shortly after the discovery of her body.[9]

Shortly after Madame Guyot's murder, Elijah Dunphy, a former employee of Constant Guyot, assumed responsibility for the road. Dunphy hired Canadian emigrant and sometime prospector Alexander MacDonald to manage the road while he concentrated on his sawmill business. MacDonald operated the facility for Dunphy until July 1876 when he and John McCrae purchased the ranch, tollgate and road for $2,300. The partners contracted with the stagecoach firm of Gilmer, Salisbury & Company for use of the road. Through the late nineteenth century, MacDonald Pass competed with Mullan and Priest's passes for the primary route over the Continental Divide west of Helena.[10]

By 1890, MacDonald Pass Road became a county-owned road. In 1926, the Federal Bureau of Public Roads (BPR) and the Montana State Highway Commission designated the MacDonald Pass Road as part of the state's federal highway system, making it part of U.S Highway 10-North. That year, the BPR[11] and the Montana Department of Transportation (MDT) began planning for the construction of a road westward from Helena over the Continental Divide. In March 1931, the BPR awarded a contract to construct a road over MacDonald Pass. The new road utilized none of the old toll road with construction occurring on an entirely new alignment. The BPR completed construction of the MacDonald Pass project in 1932.

The MDT widened the road to four lanes in 1979. Today, MacDonald Pass serves as the primary highway route over the Continental Divide west of Helena and also marks the route of the Northern Transcontinental Airway.[12]

Early Aviation in Montana

The history of flight in Montana began with daredevil aerialists that performed in fairs and carnivals across the state. Trapeze artists, balloonists and parachutists – and sometime a combination of all three – thrilled the crowds at the Montana State Fair in Helena and similar gatherings in the 1880s and 1890s. Early aerialists possessed an adventurous spirit that often overwhelmed reason. The list of those hurt and killed in their pursuit of conquering the sky is distressingly long, especially through the late nineteenth and early twentieth centuries. Means of personal mechanical transportation – automobiles and airplanes – were exciting curiosities. Their manufacturers desired that they become mainstream, and piqued the public's interests by holding exhibitions at fairs and other events nation-wide.

In 1901, Absarokee farmer Thomas Chalkley Benbow began drawing plans for an airship, and secured the patent. In Red Lodge, April 1902, with the help of some backers, he formed the American Aerial

[9] Axline, Ibid.

[10] Jon Axline, "MacDonald Pass," in *More from the Quarries of Last Chance Gulch*, Volume III (Helena: Helena Independent Record, 1998), pp. 136-37.

[11] Because MacDonald Pass crossed the Helena National Forest, it was classified a Forest Highway and under the jurisdiction of the BPR. The MDT assumed full jurisdiction of the road in 1936. Axline, Ibid; "Reports on Commercial Club's Activities Through Year 1924," *The Helena Independent*, January 16, 1925.

[12] "Helena Commercial Club had Balance in Bank January 1, First Time Out of Debt in Years," *The Helena Independent*, March 8, 1931; ""Bureau Engineer on McDonald [sic] Pass Job," *The Helena Independent*, March 18, 1931; "Work Started on West End of M'Donald Highway," *The Helena Independent*, March 29, 1931.

Navigation Company to construct an airship called the "Meteor," which he entered in the St. Louis Exposition Fair in 1904. The first recorded airplane flight in Montana took place at the Montana State Fairgrounds in Helena on September 26, 1910. Pilot J.C. "Bud" Mars made two successful flights that day in his Curtiss Aeroplane, named "Skylark."[13] Just a year later, on September 30, 1911, Cromwell Dixon made his famous flight across the Continental Divide from the State Fairgrounds.[14] Sadly, the nineteen-year-old Dixon died a few days later while performing aerial stunts at the Spokane Fair in Washington.[15]

Another famous aviator came to the Helena fairgrounds on September 23, 1913. Young Katherine Stinson earned her wings as a stunt pilot in 1912, and soon became an international celebrity as the "Flying Schoolgirl." On a tour promoting the idea that airplanes could be used by the U.S. Postal Service, Stinson thrilled the Montana State Fair crowds by not only performing stunts, but also flying bags of mail from the fairgrounds and dropping them onto Helena's downtown post office: "Another feature never seen in Montana before will be two flights daily by Aviatrix Katherine [sic] Stinson, a 20-year-old brunette, who won her pilots license on the daring she displayed. She will use a Wright biplane, the first seen in the state."[16]

Pilots returning from World War I established small airfields in several Montana towns. One early airfield was in Miles City – established in 1920 by Earl Vance and A.W. Stephenson, both Montana aviation pioneers. Earl's wife Esther Combes Vance, holds the honor as the first woman licensed to fly airplanes commercially in Montana, and the twenty-second in the nation. The Vances established a flying service business in Great Falls by the late 1920s. Soon other aviation businesses sprang up including Yellowstone Air by 1928, Johnson Flying School in Missoula, and Steve's Flying School in Butte.[17]

Air Travel through the Night Sky

Before regular commercial passenger service began in Montana, and even elsewhere in the US, many recognized the potential of the fledgling aviation industry. No one embraced it more than the Postal Service. Earle L. Ovington made the first Post Office Department-authorized mail flight by plane on September 23, 1911, at an aviation meeting on Long Island, New York. He made daily flights between Garden City Estates and Mineola, New York, dropping his mail bags from the plane to the ground where they were picked up by the Mineola postmaster.[18]

Because they had the most training – and in hopes of training others, the Army had control of the airmail service when it began a regular route in 1918. Major Reuben H. Fleet flew a Curtiss JN-4H "Jenny"

---

[13] "Helena Sees Mars in Successful Flights," *The Daily Missoulian,* September 28, 1910. "J.C. Mars and Aeroplane Sklylark, Helena, 1910," Photograph. Montana Historical Society Photo Archives, PAC 79-36, unprocessed collection.

[14] "Across the Divide Dixon Sails Easily," *The Daily Missoulian*, October 1, 1911.

[15] "Conqueror of the Rockies is Killed at Spokane Fair in Fall of 100 Feet," *The Daily Missoulian*, October 3, 1911.

[16] "Nothing Can Mar State Fair's Success," *The Daily Missoulian*, September 21, 1913; Wiley, pp. 76-77; Montana Aeronautics Commission Photographs, PAC 79-36, unprocessed collection.

[17] Frank W. Wiley, *Montana and the Sky: Beginning of Aviation in the Land of the Shining Mountains*, (Helena: Montana Aeronautics Commission, 1966), pp. 99, 102, 104-108, 141, 144.

[18] Historian, U.S. Postal Service, "Airmail," U.S. Postal Service website, accessed March 7, 2014, http://www.postalmuseum.si.edu/museum/1d_Airmail_Flag.html.

airplane from Philadelphia to Potomac Park in Washington, D.C., on May 15, 1918, the date regularly scheduled airmail service began between Washington and New York City. The flight in the opposite direction, between Washington D.C. and Philadelphia, proved less successful. An inexperienced pilot, having to rely on landforms and landmarks to guide his way, became disoriented, and crash-landed just a few miles away from his starting point. Over the next year the route became better established, and additional routes facilitated delivery across the treacherous Allegheny Mountains to Cleveland and on to Chicago.[19] In 1920, the Postal Service established a 2,680-mile transcontinental airway between New York and San Francisco, consisting of fifteen fields spaced approximately 200 miles apart.[20]

Still, pilots only had minimal navigational aids in the cockpit, usually a compass and a hand-drawn map highlighting physical landmarks along the way. By 1921, their toolkit expanded to include altimeters and turn-and-bank indicators, but daylight continued to be crucial to safe flying. Because of this, as the airmail routes stretched across the country, the flights concluded at sundown, and the bags of mail transferred to train for overnight transport.[21] The U.S. Army experimented with night flying techniques in 1921. Two lieutenants established a 72-mile air route between Dayton and Columbus, Ohio. The route included rotating beacons, field floodlights, and flashing markers "that enabled pilots to fly from one beacon to another."[22] Looking to convince Congress to fund the airmail program, Second Assistant Postmaster General Otto Praeger orchestrated a daring round-the clock flight on February 22-23, 1921, whereby four pilots endeavored to fly coast-to-coast in a 24-hour period, two in each direction. The eastbound fliers proved successful. Still, the operation proved inefficient and costly, and the Postal Service turned to private investors to create a beacon system to guide pilots along designated airways.

In 1923, the Post Office began to construct the lighted airway using private investments. Electric and acetylene beacons and intermediate landing fields marked the flight route between Cheyenne, Wyoming and Chicago, Illinois.[23] Congress saw that it could work, and in 1925 passed the Kelley Act (Air Mail Service Act) that allowed the Postal Service to contract with private companies to deliver airmail.[24] In 1926 Congress passed the Air Commerce Act.[25] This legislation shifted responsibility for airmail contracting to the Commerce Department, and within a year, the Postal Department transferred its Airways Division to Commerce, renaming it the Bureau of Air Commerce. The Bureau formulated a plan to erect beacon towers every 10 miles across flat terrain and every 15 miles in more rugged areas. The system included intermediate emergency landing fields every fifty miles. The beacons, moreover,

---

[19] Nancy A. Pope, "Airmail Service Flag," National Postal Museum website, accessed March 7, 2014, http://www.postalmuseum.si.edu/museum/1d_Airmail_Flag.html.

[20] "Fad to Fundamental: Airmail in America Timeline," National Postal Museum Website, accessed March 11, 2014, http://postalmuseum.si.edu/airmail/timeline/timeline.html.

[21] "Airmail," p. 2.

[22] Nick A. Komons, *Bonfires to Beacons: Federal Civil Aviation Policy under the Air Commerce Act, 1926-1938*, (Washington DC: Federal Aviation Administration, 1978), pp. 130-31.

[23] Steve Wolff, "The Federal Airway System: The Early Years," Flight Service History website, accessed March 10, 2014, www.atchistory.org.

[24] 43 Stat. 805. The Air Mail Service Act limited contracting to shorter "feeder routes" along the first transcontinental airway between New York and San Francisco. By 1930, commercial companies could contract for longer routes.

[25] 44 Stat. 570.

featured directional lights that could be keyed to provide important information for pilots. The planned system also included a network of radio beacons to aid in cross-country navigation.[26]

The Air Commerce Act also created the Airways Division within the Bureau of Lighthouses. Indeed various federal agencies – including the War Department – had asked the lighthouse division to design lights to help aviation over the previous decade. Through the late 1920s and early 1930s, engineers worked to perfect and standardize the beacon design.[27]

The Bureau utilized these standards and schedules throughout the country, including Montana. When planning and survey for a major new airway to service the northern tier of states began in 1934, the project took advantage of the progress made over the previous decades.

The Northern Transcontinental Airway Route and the MacDonald Pass Airway Beacon

In Montana, the first designated airway ran north-south, and connected Great Falls to Salt Lake City, via Monida Pass, Dillon, Butte, and Helena. National Parks Airways, based in Salt Lake City, held the contract for air mail delivery as early as 1927. Founded that year, its planes shuttled between Salt Lake, Great Falls, and Glacier Park, with stops in Dillon, Butte, and Helena. Montana aviation historian Frank Wiley served as a reserve pilot for NPA and wrote this note about his experiences. "I well remember the National Parks boys airmailing, with their own money, telephone books stolen from their hotel rooms to help keep the poundage up in these economically precarious days of early airmail subsidy."[28]

In 1934, federal government chose another pioneering air service, Northwest Airlines, to fly the newly established Northern Transcontinental Airway between Seattle and New York. The airline had worked in the airmail business for eight years. In September 1926, Colonel Lewis Brittin founded Northwest Airways to fly mail for the U.S. Post Office Department in the upper Midwest. The following year, the company began carrying passengers and changed its name to Northwest Airlines. In 1929, the company was purchased by a group of Minneapolis, Minnesota businessmen headed by Richard Lilly. The new owners expanded the air fleet and the company's services into Illinois and southern Canada. By the mid-1930s, when selected to fly the Northern Transcontinental Airway, Northwest Airlines employed 119 people, including 23 pilots and co-pilots. Its fleet included 23 airplanes and 40 maintenance people. The airline flew 5,180 miles daily and carried 17,532 passengers in 1933. By 1939, there were three daily flights between Minneapolis and Seattle with extensions into the western Pacific Ocean to Japan and Alaska. [29]

---

[26] Brenda J. Spivey, "Airway Beacons, an Integral Part of Montana's Night VFR Navigational History: Past History, Present Service and Present Value," (Master's Thesis, Embry Riddle Aeronautical University, 1995), pp. 3-5; Steve Wolff, "The Federal Airway System: The Early Years," accessed online March 11, 2014, www.atchistory.org; Komons, *Bonfires to Beacons*, pp. 134-135.

[27] For more information about the Bureau of Lighthouses' Airways Division see Mary Louise Clifford, "Research on the Airway Division, Bureau of Lighthouses," accessed online March 11, 2014, http://www.marylouiseclifford.com/sitebuildercontent/sitebuilderfiles/uslhsairways.pdf.

[28] Spivey, pp. 3-5. From 1928 through 1931, intermediate landing fields for the Great Falls, Montana, to Salt Lake City, Utah, airway were planned, surveyed, cleared and installed. In Montana, these sites included Monida, Dell, Dillon, Twin Bridges, and Piedmont (Whitehall Field), with plans and surveys being made for facilities that would be built at Armstead, Boulder, Mitchell, and Cascade.

[29] "Airways of the United States," *Aviation*, vol. 33, no. 11 (November 1934), pp. 346, 348.

Plans for the airway proceeded quickly. The U.S. Department of Commerce's Bureau of Air Commerce announced in September 1934 its plans to construct 125 beacon lights and intermediate emergency landing fields every 50 miles on the Northern Transcontinental Airway between Minneapolis-St. Paul and Seattle. The Bureau estimated the cost of the project at around $275,000, all which would be paid by the federal Project Works Administration. Construction of the first towers in Montana began in October 1934 between Miles City and Billings.[30]

Construction of six airway beacons between Bozeman and Helena occurred during the summer of 1935. By early September, beacons had been erected at Bozeman Pass, Strawberry Butte, Townsend and the Spokane Hills east of Helena. Supervised by Bureau of Commerce engineer A. S. Watson, construction crews consisted of 24 men, all hired through the National Re-employment Service offices in the counties where the construction occurred. Skilled workers and supervisors were not hired through the service. The crews completed towers at Belgrade and Toston by September 15, 1935. When the Bureau of Air Commerce completed the beacon system to Helena, Northwest Airlines flew a Lockheed Electra passenger plane into the city's municipal airport the night of September 15th. The inaugural flight utilized the beacons to navigate to Helena. From there, the flight turned south to Butte and then proceeded westward to Seattle. The *Helena Independent* reported that "A [90-foot] tower is now under construction on the Continental divide south of the highway over MacDonald Pass near the public campgrounds . . . it will house a large direction and safety light."[31]

Completion of the Northern Transcontinental Airway occurred in November 1935. The last beacon erected on the route was the beacon on MacDonald Pass. The Civil Air Administration (CAA) lit the beacon on November 10, 1935. The completion of the system caused celebration in Helena. On November 22, an estimated 4,000 people braved frigid weather to attend an event at Helena Municipal Airport to celebrate the completion of the beacon system. Attendees heard speeches by local officials, including Fred B. Sheriff, chairman of the Helena Airport Commission, and by Eugene Vidal, the director of the US Department of Commerce's Bureau of Air Commerce. The *Helena Independent* called the

[30] The Department of Commerce surveyed the Missoula-Bozeman segment of the Northern Transcontinental Airway in the summer of 1934. U. S. Department of Commerce, "Five New Federal Airways under Survey and Construction." *Air Commerce Bulletin*, vol. 6, no. 2 (15 August 1934), pp. 30, 31; "Beacon Light Sites have been Selected," *The Helena Independent*, October 5, 1934; "Will Begin Task of Lighting Airways Soon," *The Helena Independent*, September 6, 1934; "Northern Air Route is to be Lighted," *The Helena Independent*, September 7, 1934; "Much Equipment on Northern Airways," *The Helena Independent*, October 19, 1934.

[31] The "public campground" is now named for Cromwell Dixon, the first person to fly an airplane over the Continental Divide. Dixon's Curtiss biplane landed at Blossberg, a few miles south of MacDonald Pass on September 30, 1911. Martin J. Kidston, *Cromwell Dixon: A Boy & His Plane, 1892-1911*, (Helena, Mont.: Far Country Press, 2007), pp. 135-36; "Four of Six Airways Beacon Towers Built," *The Helena Independent*, September 4, 1935; "Beacon Light Sites have been Selected," *The Helena Independent*, October 5, 1935; "Northern Air Route is to be Lighted," *The Helena Independent*, September 7, 1934; "Much Equipment on Northern Airways," *The Helena Independent*, October 19, 1934; "Start Construction of Airway Beacons," *The Helena Independent*, August 2, 1935; "First Flight of Northwest Airlines through Helena to Start Sunday from Seattle," *The Helena Independent*, September 13, 1935: "People are Urged to Witness First Northwest Flight," *The Helena Independent,* September 15, 1935.

celebration the "Hanging of the Golden Lantern marking the inauguration of the night flight of the Northwest Airlines following completion of the beacon system from the Twin Cities to the coast."[32]

The beacon system reached its zenith nation-wide in 1941. According to aviation historian Tom Johnson by 1945 Montana had a total of 84 beacons across the state, 70 located between airports and 14 at airports. Not all were necessarily the same style as the MacDonald Pass beacon, but rather "flashers" that marked the course.[33]

The beacon system laid the ground work for the modern Federal Airway system. Historian Edward P. Warner noted in 1937:

> Of all American contributions to the technique of air transport operations flying at night by beacons was the greatest. How great it was, and how far it put the United States ahead of the rest of the world, was attested to by the fact that, as late as the early 1930's, when Americans were flying more or less routinely at night, Europeans were still fingering the hem of the idea of night flying."[34]

Of course, the system required careful maintenance, and though the technology included failsafe redundancy, there were incidents that called for immediate repair. For example, in January 1951, a Montana Highway Patrolmen noticed the beacon on MacDonald Pass stopped rotating during a cold snap. In minus 40 degree weather, the CAA technician travelled to the top of the snowy pass and climbed the 91-foot tower to assess the problem with the beacon. The extreme cold froze the grease that allowed the beacon to rotate and, consequently, blown the electrical fuse that regulated the power. After rewiring the beacon, it once again grudgingly started up. The technician suffered a frostbitten forehead during the ordeal. For the most part, however, the ingenious design of the beacons negated the need for anything other than routine maintenance.[35]

The lighted airway beacon system flourished nationwide and in Montana into the mid 1960s. Historian Brenda Spivey explains that:

> During that decade navigational technology advanced so quickly that many pilots thought the beacon system was becoming antiquated. The Federal Aviation Administration, in cost cutting efforts, began to pare down the system by decommissioning many beacons, especially in parts of the country where the FAA was unchallenged. The mountainous states were not so easily persuaded, and in Montana's case the responsibility of system maintenance was transferred to a state level.[36]

---

[32] "Celebration Here," *The Helena Independent*, November 10, 1935; "Thousands Forget Quakes to Join in Celebration of Transcontinental Airline," November 23, 1935; "Helena Marks Air Line Event," *The Helena Independent*, November 24, 1935.

[33] Tom Johnson, "Research Collection of Aeronautical Charts, 1943-1947," on file at Montana State Historic Preservation Office and Montana Department of Transportation Aeronautics Division, Helena, MT.

[34] Edward P. Warner, *Early History of Air Transportation,* (York, Pennsylvania, 1937), pp. 26-28.

[35] "Airway Beacon Power Plants," p. 40; "Beacon Light Atop MacDonald Pass Freezes at Night," *The Helena Independent Record*, January 29, 1951.

[36] Spivey, p. 5.

In 1958, the newly-established Federal Aviation Administration (FAA) took jurisdiction over the navigation systems along designated airways. The agency quickly began to assess its resources, and questioned the necessity of the beacon system, given the advances in technology over the mid-twentieth century. Beginning in the mid-1960s, the FAA made several attempts to decommission the airway beacons. In 1965, the agency, together with the Montana Aeronautics Commission (MAC), surveyed the 39 beacons under their control. As a result, the FAA decided to decommission all but 8 beacons, transferring many of them to local airports. The MacDonald Pass Beacon remained part of the FAA system. The Montana Aeronautics Commission committed to maintaining 12 additional beacons at that time, and relit the St. Regis beacon in 1967, bringing the MAC total to 13.

By 1971, the FAA decided to decommission their eight beacons. Strong local objection, particularly by private pilots, persuaded the MAC to assume control of those eight beacons as well. The transfer took place over 1978 and 1979, and jurisdiction over the MacDonald Pass Beacon transferred on February 1, 1979.[37] Through the 1980s and 1990s, Montana pilots thwarted additional attempts to turn off Montana's lighted beacons. Each time the idea to turn the system off arose, it proved to be an unsuccessful effort by the Montana state government to cut costs. However, each time, in 1988 and 1991 student pilots, private pilots, and commercial pilots let the Montana Aeronautical Division know that they strongly believed the beacons contributed to flight safety, and rated the cost of operating the beacons as "beneficial" or "very beneficial."[38] As a result, the Division continues to maintain the beacons to the present day, the only state in the country to do so.

Beacon Design and Architectural Significance

The Bureau of Air Commerce standardized the design of the beacon towers, beacons, and generator houses by 1931. In Montana, the International Derrick & Equipment Company of Columbus, Ohio fabricated the towers utilizing open-hearth steel with all components galvanized. To facilitate the transportation and construction of the towers, no component measured more than 22 ft. in length. The average tower height measured 51 ft., but in mountainous terrain, it stretched to 91 ft. with each tower weighing 4,200 pounds. A 7-foot square platform with a subway-type steel grating floor and angle steel guardrails capped each tower.[39]

The beacons underwent an evolution of design in the 1920s and early 1930s as federal authorities strove to provide more efficient light sources for its fledgling national system. The U.S. Post Office Department installed the first lighted beacons between Chicago, Illinois and Cheyenne, Wyoming in 1923. The department experimented with different types of lights, settling, initially, on 24-inch revolving beacons. The type, however, proved unsatisfactory in the Rocky Mountains, where the terrain necessitated brighter lights with a greater viewing distance. In 1931, the U.S. Patent Office granted John Bartow a patent for a new type of beacon which combined the advantages of highway candle power "of the projector type with

[37] Spivey, p. 13,

[38] Spivey, p. 13.

[39] "Large Uses of Steel in Small Ways: Airway Beacon Towers." *Steel,* Vol. 89 (October 1, 1931), p. 50; Komons, *Bonfires to Beacons*, pp. 135, 137.

the wide angle visibility of the flashing type" of beacon.[40] The beacon, encased by a 20-inch glass dome, solved the problem of uneven pressure from high winds and proved less liable to freeze up in inclement weather in remote locations. The dome housed a 24-inch reflector amplified by three lenses. The design made the beacon light distinguishable from other lights. Moreover, the system included red and green directional lights that corresponded with the air route; the red course lights flashed a Morse code signal identifying the beacon to pilots. Bartow licensed General Electric to manufacture the beacon. The company continued to refine the design, which became the standard for beacons on the mountainous portion of the Northern Transcontinental Airway route by 1934.[41]

The Bartow beacon emitted one million candle power every 1/10th of a second that could easily be seen over the rugged terrain in the American West. The beacon rotated at six rpm's and each beacon unit included a spare light bulb in case one should burn-out. Andrew Boone wrote in 1932 that:

> Seldom does a beacon light anywhere on the nation's air chain dim and die out. Two bulbs are fitted into each of the million-candle-power lights, although only one burns. Should the filament burn out, the light would dim momentarily while the other bulb is being pulled into an upright position by the electrically operated mechanism.

Although not confirmed, the bulb reportedly could be automatically placed in position within a few seconds of the primary bulb's failure.[42]

Electricity powered the beacons, either through a direct power line connection or by a generator in more remote locations. Buildings were constructed from a variety of locally accessible materials, but the most common materials included wood or corrugated metal, depending on site conditions. Each building housed two generators: the primary unit and a backup should the main generator fail. The generator started and stopped running after receiving a signal from either an astronomical clock or a photocell at dusk and at dawn. While the exact method employed for the MacDonald Pass beacon is unknown, it was likely a photocell. In 1936, the *Montana Standard* described the astronomical clock at the Homestake Pass near Butte: "On the day the light was placed in operation, representative of the "Bureau of Air Commerce" wound a clock that control[led] the beacon. If not forgotten in the meantime, the clock will again be wound on December 12, 1945." Despite that, evidence suggests the increased use of photocells as photocells accounted for "the unusual conditions caused by a cloudy or bright day."[43]

The electrical signal initiated a start-up sequence that involved the "crank, choke, start and connect" of the engine. Each generator utilized a 32-volt storage battery to begin the sequence. The operation of the generator kept the battery charged. Each generator was equipped with thermostats and oil heaters in areas of severe winter weather. When the temperature dropped below 40º F, the starting sequence initiated itself. Gasoline motors fed by 515 gallon storage tanks located adjacent to the generator house powered

---

[40] Wolff, "The Federal Airway System;" Ritchie, "Development of Airway Beacons," *Aero Digest*, Vol. 27, no. 4 (October 1935), 38-39

[41] Wolff, "The Federal Airway System;" Ritchie, "Development of Airway Beacons," *Aero Digest*, Vol. 27, no. 4 (October 1935), pp. 38-39; Bartow, J.B., "Beacon," U.S. Patent 1834041, filed January 14, 1930, and issued December 1, 1931.

[42] Andrew R. Boone, "Night Flying with Safety," *Scientific American*, Vol. 147 (August 1932), pp. 71, 73.

[43] "Large Uses of Steel, 50; "Airway Beacon Power Plants," *Aero Digest*, Vol. 25 (November 1934), p. 40; "Lighthouses Move in from Coast as Transcontinental Airline gets Underway," *The Montana Standard*, February 16, 1936.

the generators. Each generator used 9/10 of a quart of white gasoline per each kilowatt hour. Ideally, the gasoline tank required filling once every eight months.[44]

The Bureau of Air Commerce employed an army of "mechanicians" to maintain the beacon system. The men visited each beacon every two weeks and made adjustment and repairs, when necessary. On average the generators needed a complete overhaul every two years. Most of the time, major repairs and generator overhauls occurred on-site, however, moving a generator off-site for repairs infrequently occurred. Maintenance duties included greasing the rotating beacons, replacing burned out bulbs, and adjusting the directional lights.

Constructed in 1935, the MacDonald Pass Airway Beacon represents the standard Bureau of Air Commerce-designed at the time. The International Derrick & Equipment Company of Columbus, Ohio fabricated the metal components of the 91-foot tower, which weighs 4,200 pounds. It displays the standard grated platform with angle steel guardrails. It originally featured a rotating beacon housed within a 20-inch glass dome. The 24-inch mirror rotated at six rpms and projected a two-million candlepower beam of light every 1/10 of a second. The platform also included red course lights that flashed a Morse code signal identifying the beacon to pilots. Initially, electricity produced by a generator housed in an adjacent building (since removed) powered the beacon. Like all beacons in remote areas, the building housed a primary generator and a backup unit should the first fail. The electrical shed housed maintenance equipment, circuit boards and a seasonal schedule that provided guidance for setting the astronomical clock (if so equipped instead of the optional photocell). Its visibility from the Helena Municipal Airport beacon, 12 miles to the east, and from the Avon airway beacon approximately 15 miles to the west illustrates the proficiency of the MacDonald Pass beacon. When constructed, the airway beacon represented the latest navigational addition to a significant mountain pass in the history of this area.

The MacDonald Pass beacon continues to flash a steady "dash, dash, dot" to airplane pilots with the "red light when approaching the beacon straight into the light beam [showing] the pilot that he was on course."[45] The MacDonald Pass Airway Beacon is not merely a relic of past Montana aviation history, instead it continues to operate as it has for almost 80 years providing a navigable airline corridor and reassurance to hundreds of pilots who continue to fly over MacDonald Pass.

---

[44] "Airway Beacon Power Plants," p. 40; "Large Uses of Steel," p. 50.

[45] "New Program Helps Montanans," *The Helena Independent Record*, October 28, 1965; "Montana Beacons Bring Memories of Days Long Past," *Rocky Mountain Intercom,* May 25, 1979, pp. 1-2.

9. Major Bibliographical References

Bibliography (Cite the books, articles, and other sources used in preparing this form.)

"Air Schedule Changed." *The Helena Independent*, 3 October 1934.

"Airship Beacon Installed Here." *The Montana Standard*, 14 December 1935.

"Airways Beacon Power Plants." *Aero Digest*. Vol. 25 (November 1934).

"Airways of the United States." *Aviation*. Vol. 33, no. 11 (November 1934).

Alt, David Alt and Donald W. Hyndman. *Roadside Geology of Montana*, (Missoula, Montana: Mountain Press Publishing Company, 1986).

Axline, Jon. "MacDonald Pass," in *More from the Quarries of Last Chance Gulch*, Volume III (Helena: Helena Independent Record, 1998).

___. "Frenchwoman's Road Toll Road." *Helena Independent Record,* 10 June 1999.

"Beacon Light Atop MacDonald Pass Freezes at Night." *The Independent Record*, 29 January 1951.

"Beacon Light Sites have been Selected." *The Helena Independent*, 5 October 1934.

Boone, Andrew R. "Night Flying With Safety." *Scientific American*. Vol. 147 (August 1932).

"Celebration Here." *The Helena Independent*, 10 November 1935.

"East-and-West Plane Flights to be Split with Capital City." *The Montana Standard*, 13 September 1935.

"First Air Beacon is in Operation." *The Montana Standard*, 10 December 1935.

"First Flight of Northwest Airways through Helena to Start Sunday from Seattle." *The Helena Independent*, 13 September 1935.

"First Plane Over Light Route from Salt Lake to Arrive at 10:05 Tonight." *The Helena Independent*, 20 December 1935.

"Four of Six Airways Beacon Towers Built." *The Helena Independent*, 4 September 1935.

"Helena Commercial Club had Balance in Bank January 1, First Time Out of Debt in Years." *The Helena Independent*, 8 March 1931.

"Helena Marks Air Line Event." *The Montana Standard*, 24 November 1935.

Ingram, Patricia M. "Historic Transportation Routes Through Southwestern Montana, Report prepared for the Western Interstate Commission for Higher Education." (Dillon, Montana: Bureau of Land Management, 1976).

Johnson, Tom. "Research Collection of Aeronautical Charts, 1943-1947." On file at Montana State Historic Preservation Office and Montana Department of Transportation Aeronautics Division, Helena, MT.

Kidston, Martin J. *Cromwell Dixon: A Boy & His Plane, 1892-1911.* (Helena, Mont.: Far Country Press, 2007).

Komons, Nick A. *Bonfires to Beacons: Federal Civil Aviation Policy under the Air Commerce Act, 1926-1938*. (Washington DC: Federal Aviation Administration, 1978).

"Large Uses of Steel in Small Ways: Airway Beacon Towers." *Steel*. Vol. 89 (October 1, 1931).

Laws of the Territory of Montana Passed at the Third Session of the Legislature Beginning November 5, 1866 and Ending December 15, 1866. (Virginia City, Mont. Territory: John P. Bruce Public Printer, 1866).

"Lighthouses Move in from Coast as Transcontinental Airlines Get Underway." *The Montana Standard*, 16 February 1936.

"Montana Beacons Bring Memories of Days Long Past." *Rocky Mountain Intercom* (May 25, 1979).

"Much Equipment on Northern Airways." *The Helena Independent*, 19 October 1934.

"National Parks to Have Beacons From This City to Dell." *The Helena Independent*, 26 September 1935.

"New Program Helps Montanans." The Independent Record, 28 October 1965.

"Northern Air Route to be Lighted." *The Helena Independent*, 7 September 1934.

"Northwest Airlines Begins Ninth Year of Operation." *The Helena Independent*, 1 October 1934.

"People are Urged to Witness First Northwest Flight." *The Helena Independent*, 15 September 1935.

"Reports on Commercial Club's Activities Through Year 1924." *The Helena Independent*, 16 January 1925.

Ritchie, H. C. "Development of Airway Beacons." *Aero Digest*, vol. 27, no. 4 (October 1935).

Spivey, Brenda J. "Airway Beacons, an Integral Part of Montana's Night VFR Navigational History: Past History, Present Service and Present Value." (Masters Thesis, Embry Riddle Aeronautical University, 1995).

"Start Construction of Airway Beacons." *The Helena Independent*, 2 August 1935.

"State Briefs." *The Helena Independent*, 26 February 1935.

"Thousands Forget Quakes to Join in Celebration of Transcontinental Airline." *The Helena Independent*, 23 November 1935.

"Three Forks Receives Air Beacon Lights." *The Helena Independent*, 29 July 1935.

U. S. Department of Commerce. "Five New Federal Airways under Survey and Construction." *Air Commerce Bulletin*, vol. 6, no. 2 (15 August 1934).

"Viewed from Abroad." *Aviation*. Vol. 33, no. 11 (November 1934).

Warner, Edward P. *Early History of Air Transportation*. (York, PA: Maple Press, 1937).

"Whitehall Surrounded by Air Beacon Lights." The Montana Standard, 22 December 1935.

Wiley, Frank W. *Montana and the Sky: Beginning of Aviation in the Land of the Shining Mountains*. (Helena: Montana Aeronautics Commission, 1966).

"Will Begin Task of Lighting Airways Soon." *The Helena Independent*, 6 September 1934.

Wolff, Steve. "The Federal Airway System: The Early Years." Viewed at www.atchistory.org.

Previous documentation on file (NPS):

____ preliminary determination of individual listing (36 CFR 67) has been requested
____ previously listed in the National Register
_X _previously determined eligible by the National Register
_____designated a National Historic Landmark
____ recorded by Historic American Buildings Survey #_____
_____recorded by Historic American Engineering Record # _____
____ recorded by Historic American Landscape Survey # _____

Primary location of additional data:
____ State Historic Preservation Office
__X_ Other State agency
____ Federal agency
____ Local government
____ University
____ Other
Name of repository: __Montana Department of Transportation __

Historic Resources Survey Number (if assigned): _____

---

10. Geographical Data

Acreage of Property ____0.3_____

Use either the UTM system or latitude/longitude coordinates

Latitude/Longitude Coordinates
Datum if other than WGS84:_____
(enter coordinates to 6 decimal places)
1. Latitude: 46.556282 Longitude: -112.30935367108145

2. Latitude: Longitude:

3. Latitude: Longitude:

4. Latitude: Longitude:

Or

UTM References
Datum (indicated on USGS map):

[ ] NAD 1927 or [X] NAD 1983

1. Zone: 12 Easting: 399635 Northing: 5156690

2. Zone: Easting: Northing:

3. Zone: Easting: Northing:

4. Zone: Easting : Northing:

Verbal Boundary Description (Describe the boundaries of the property.)

The MacDonald Pass Airway Beacon is located in Powell County, Montana at UTM 12: 399635E/ 5156690N (SE¼ SE¼ of Section 2, T9N, R6W). It is a 40' x 30' square situated on top of a granite outcrop that dominates the local viewshed. A United States Geological Service benchmark is located directly below the beacon tower. The beacon occupies a 0.3 acre parcel on the Helena National Forest. The guy wires supporting the tower are located both in Powell County and in the adjacent Lewis and Clark County immediately to the east. The site includes all the features associated with the operation of the beacon from 1935 to 2013.

Boundary Justification (Explain why the boundaries were selected.)

The boundary is drawn based on the metes and bounds described in the August 11, 2003 Special Use Permit between the Montana Department of Transportation's Aeronautics Division and the Helena National Forest. The boundary encompasses the beacon tower, electrical shed and generator house foundation at the top of a rocky outcrop south of U.S. Highway 12. The Special Permit describes the boundary as: "Start at initial point 15' S E9º E of the SE corner of the Beacon tower. Thence south 20' to point of beginning: Initial point is N 59ºW- 947 ft. from the SE corner of Section 2, T9N, R6W, MPM."

---

11. Form Prepared By

name/title: Jon Axline/Historian, with contributions by Kate Hampton
organization: Montana Department of Transportation
street & number: 2701 Prospect Avenue
city or town: Helena state: MT zip code: 59620
e-mail jaxline@mt.gov
telephone: 406-444-6258
date: December 3, 2013

Additional Documentation

Submit the following items with the completed form:

- **Maps:** A **USGS map** or equivalent (7.5 or 15 minute series) indicating the property's location.
  Sketch map for historic districts and properties having large acreage or numerous resources. Key all photographs to this map.
- **Additional items:** (Check with the SHPO, TPO, or FPO for any additional items.)

Property Owner:
(Complete this item at the request of the SHPO or FPO.)

name Montana Department of Transportation/Aeronautics Division

street & number POB 200507 telephone (406) 444-9569

city or town Helena state MT zip code 59620-0507

name United States Forest Service, Helena National Forest

street & number 2880 Skyway Drive telephone (406) 449-5201

city or town Helena state MT zip code 59602

Photographs

Photo Log, All Photographs:

Name of Property: MacDonald Pass Airway Beacon
City or Vicinity: Helena vicinity
County: Powell State: MT
Photographer: Kate Hampton
Date Photographed: April 1, 2013 and November 6, 2013

Please See Continuation Sheets

Paperwork Reduction Act Statement: This information is being collected for applications to the National Register of Historic Places to nominate properties for listing or determine eligibility for listing, to list properties, and to amend existing listings. Response to this request is required to obtain a benefit in accordance with the National Historic Preservation Act, as amended (16 U.S.C.460 et seq.).
Estimated Burden Statement: Public reporting burden for this form is estimated to average 100 hours per response including time for reviewing instructions, gathering and maintaining data, and completing and reviewing the form. Direct comments regarding this burden estimate or any aspect of this form to the Office of Planning and Performance Management. U.S. Dept. of the Interior, 1849 C. Street, NW, Washington, DC.

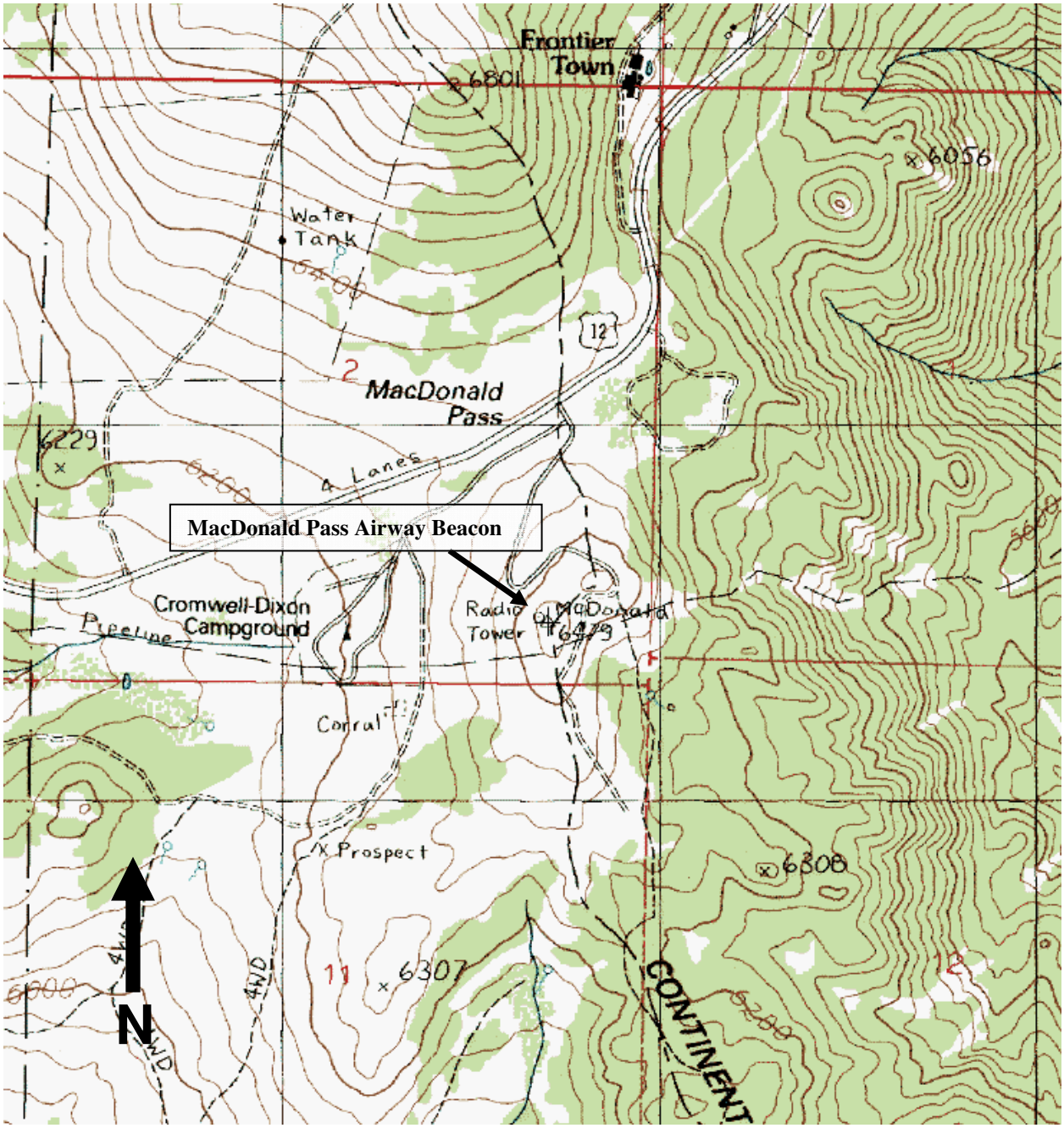

Location of MacDonald Pass Airway Beacon. Found on the MacDonald Pass, Montana, 7.5' Provisional Edition topographic map, 1989.

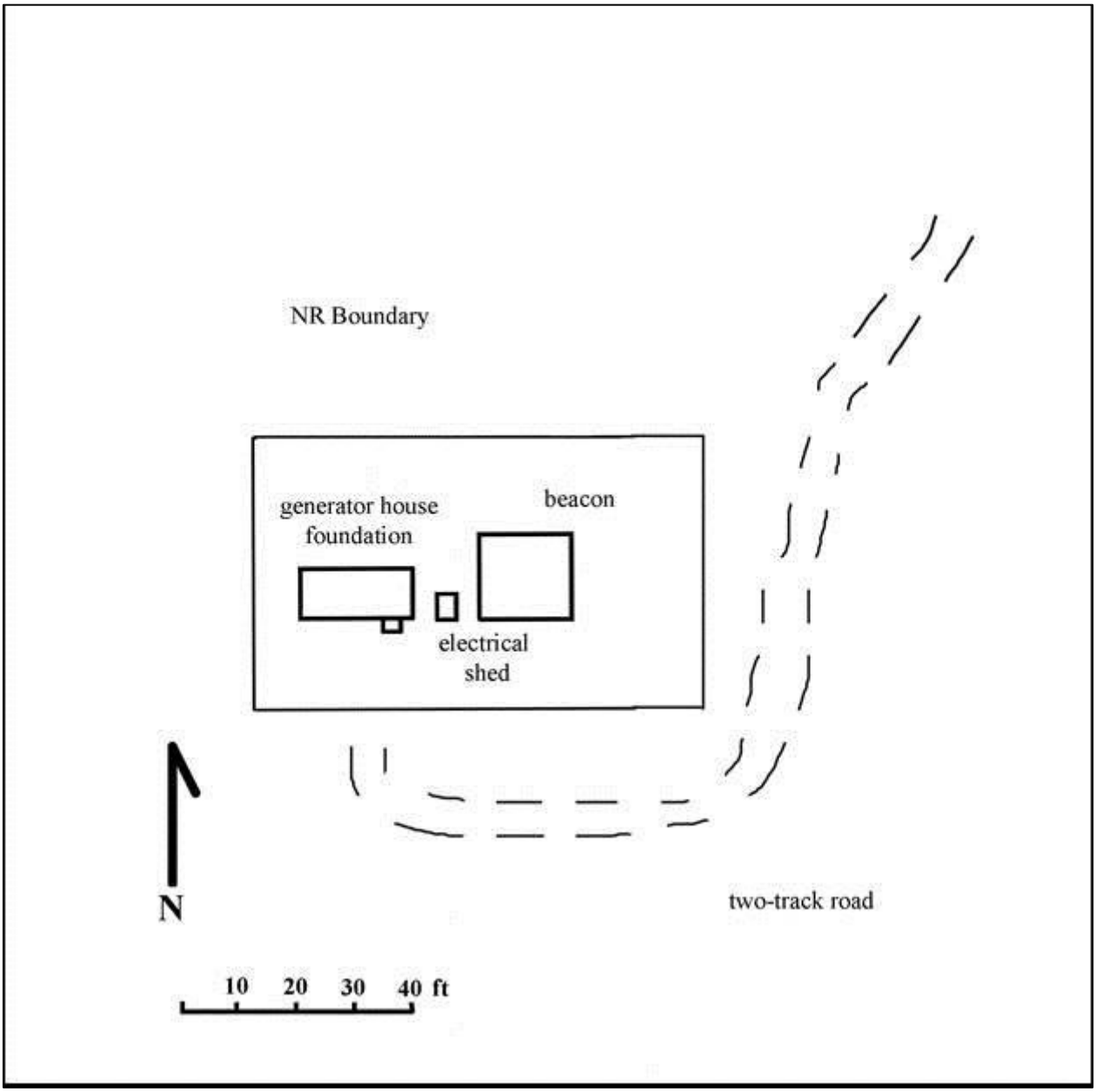

Sketch Map of MacDonald Pass Airway Beacon

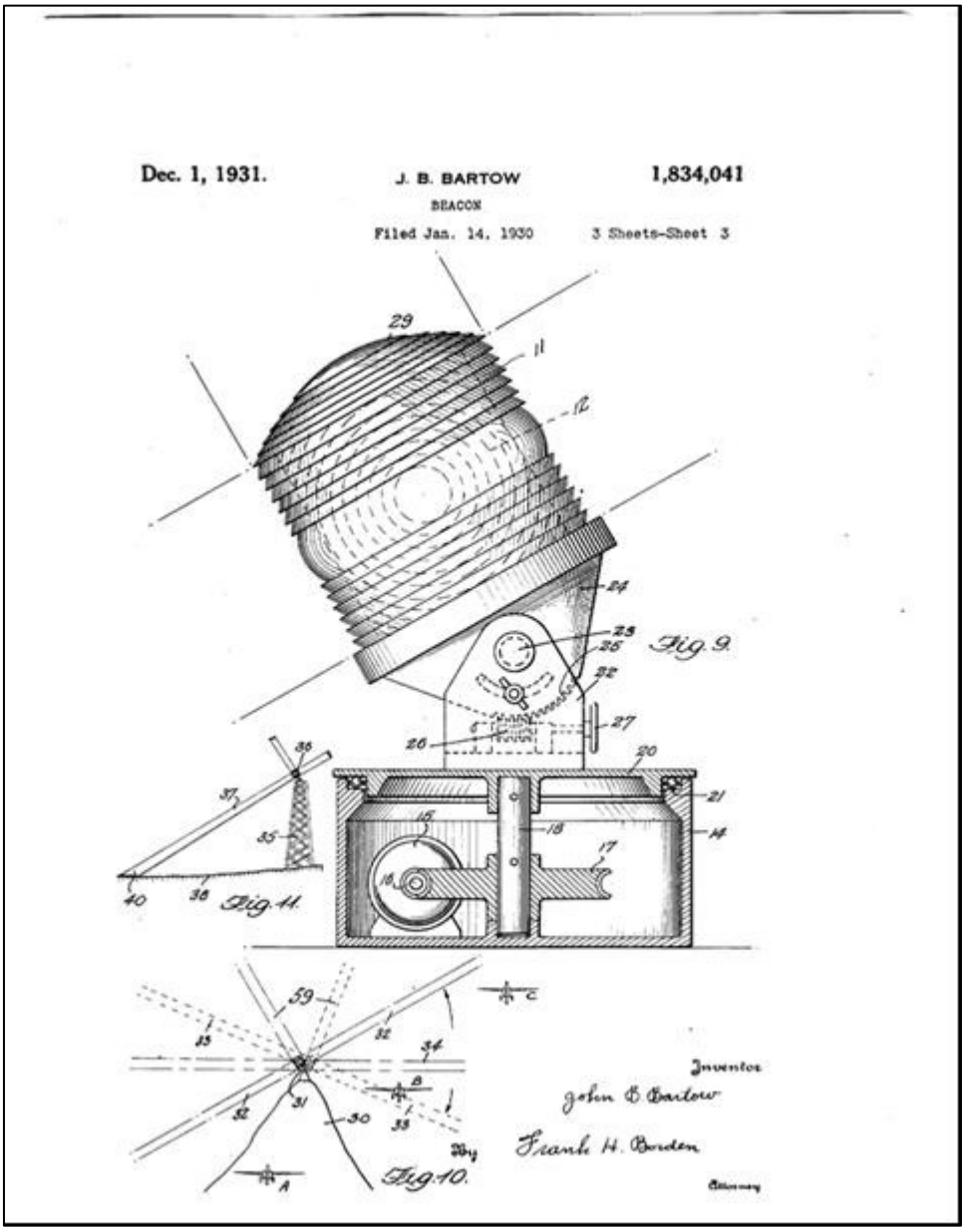

Bartow, J.B., "Beacon," U.S. Patent 1834041, filed January 14, 1930, and issued December 1, 1931.

"J.C. Mars and Aeroplane Sklylark, Helena, 1910," Photograph. Montana Historical Society Photo Archives, PAC 79-36, unprocessed collection.

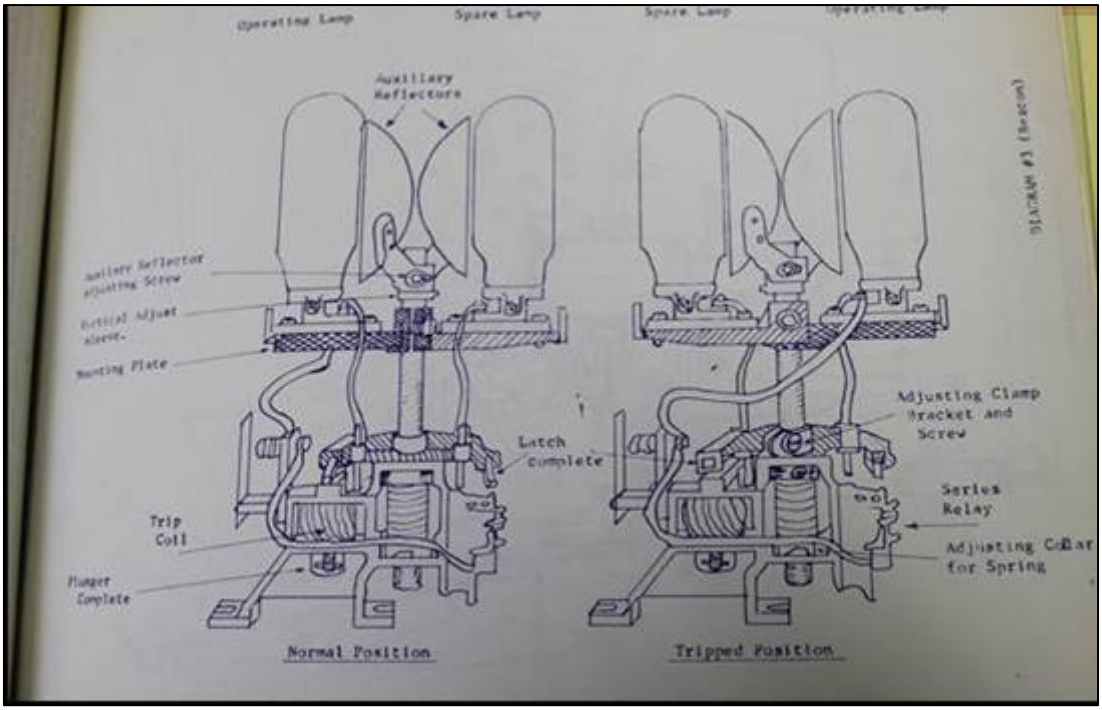

Diagram of beacon design showing mechanism for switching bulbs in the event the first burns out.. "Beacon Files," Montana Aeronautics Division, Helena, MT.

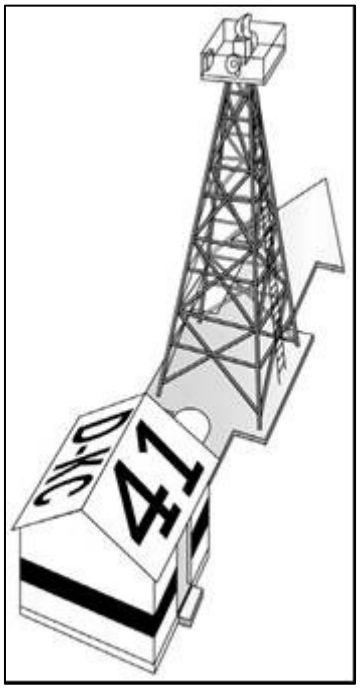

Standardized beacon design by 1931 included a tower, generator shed, and often a concrete directional arrow. The generator shed roof displayed markings that indicated the airway designation and distance along the airway.

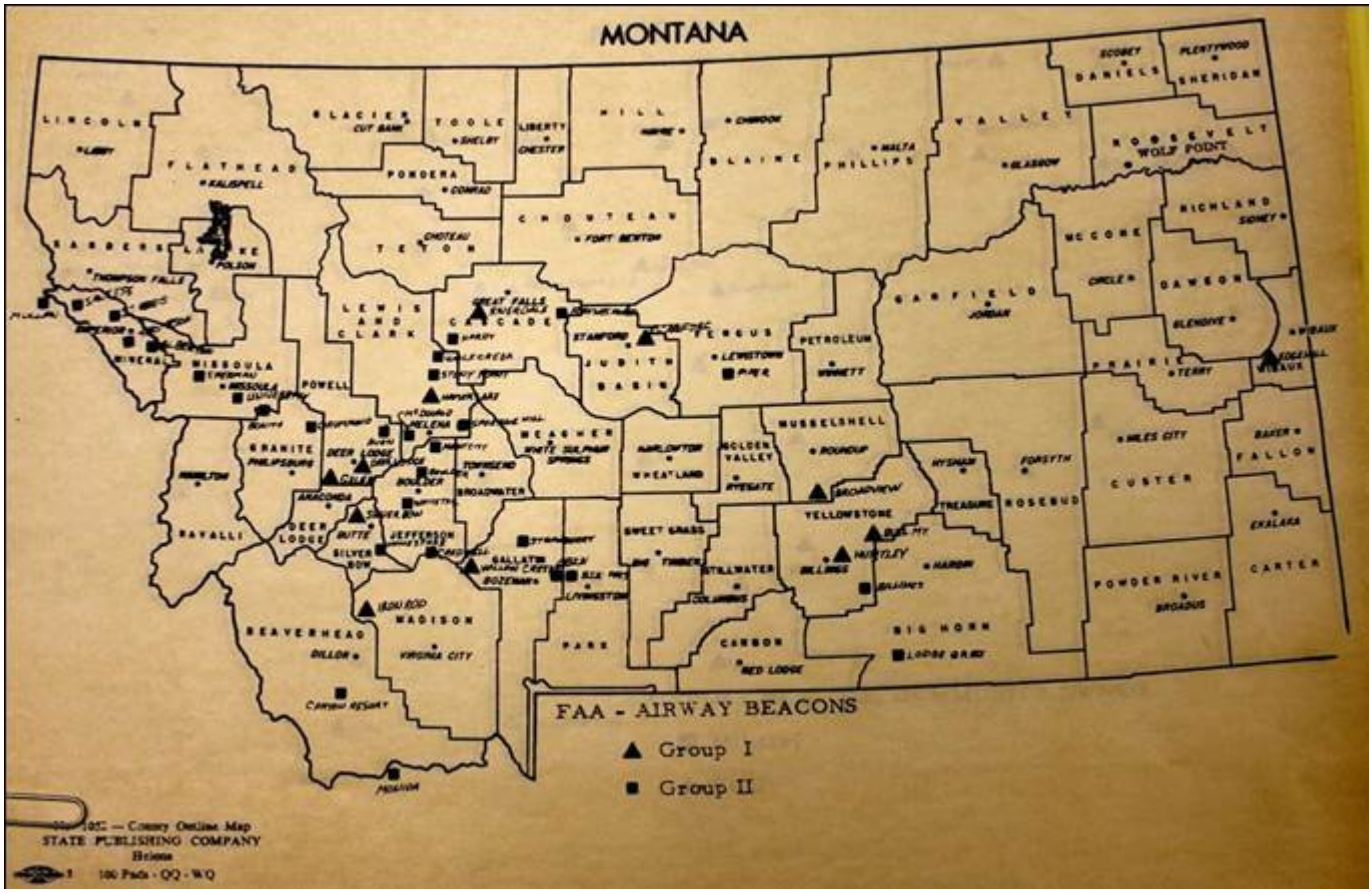

In 1965, the FAA surveyed the Montana beacon system, and grouped them, identifying "Group I" as those that should be decommissioned, and "Group II" as those to remain lit. "FAA – Airway Beacons," Map, Beacon Relocation Program Folder, Montana Aeronautics Division Archives, Helena ,MT.

Photo #0001: MacDonald Pass Airway Beacon with beacon in foreground. View to the South. Photo date: April 1, 2013.

Photo #0002: MacDonald Pass Airway Beacon with generator house foundation in foreground. View to the east. Photo date: April 1, 2013.

Photo #0003: MacDonald Pass Airway Beacon. Close up of beacon tower's south side, view northwest. Photo date: April 1, 2013.

Photo #0004: MacDonald Pass Airway Beacon. View to top of beacon from the south side of tower. Photo date: April 1, 2013.

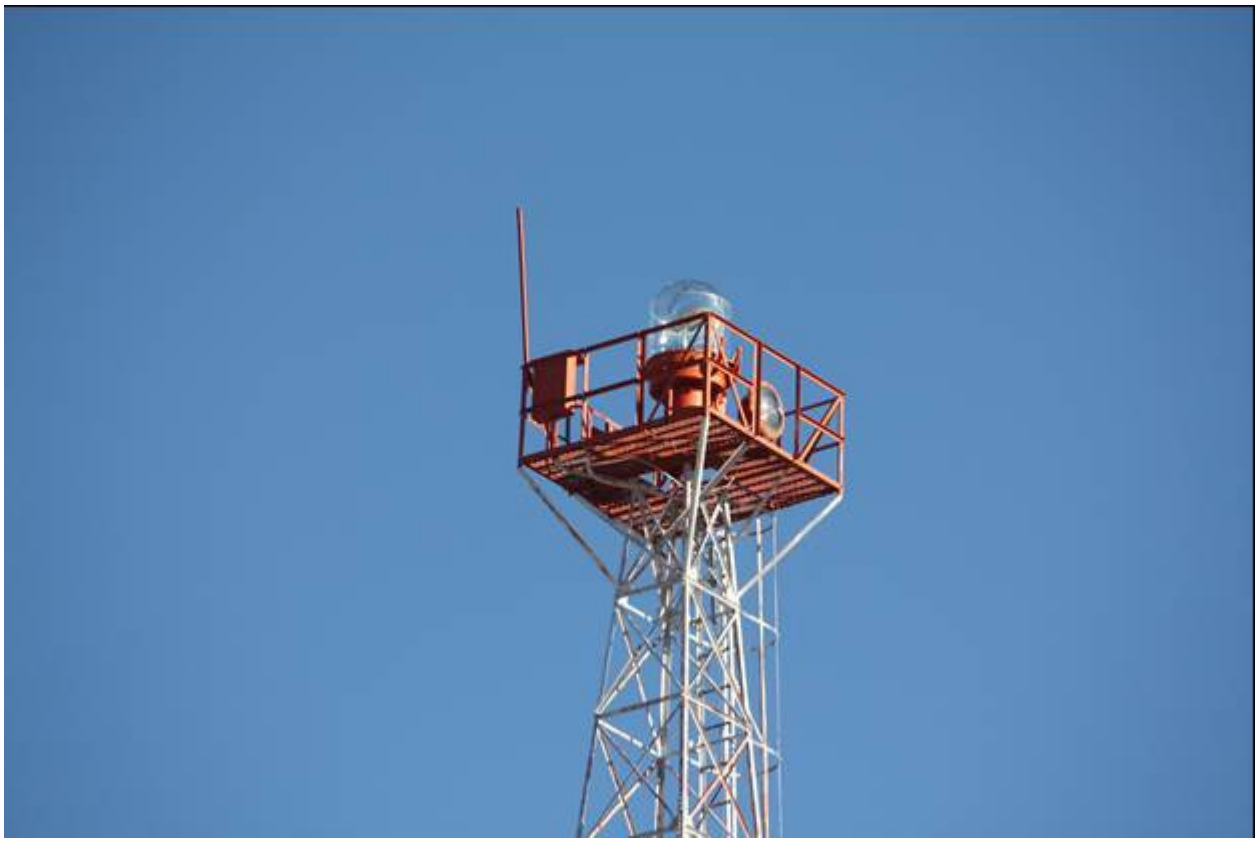

Photo #0005: MacDonald Pass Airway Beacon. Close up of dome and platform at top of beacon, view to southeast. Photo date: April 1, 2013.

Photo #0006: MacDonald Pass Airway Beacon. Left to right: generator house foundation, electrical shed, southwest corner of beacon tower. View to the northwest. Photo date: April 1, 2013.

Photo #0007: MacDonald Pass Airway Beacon. Left to right: generator house foundation, electrical shed, southwest corner of beacon tower. View to the northeast. Photo date: April 1, 2013.

Photo #0008: MacDonald Pass Airway Beacon. Generator house foundation in foreground, electrical shed behind generator house foundation, beacon behind electrical shed. View to the east-southeast. Photo date: April 1, 2013.

Photo #0009: MacDonald Pass Airway Beacon. Overview of topography from the MacDonald Pass Airway Beacon. View to the northeast. Photo date: April 1, 2013.

Photo #0010: MacDonald Pass Airway Beacon. Overview of property. View to the south. Photo date: April 1, 2013.