East Meets West:

The Chinese Experience in Montana

东 西

East West

User Guide
Provided by The Montana Historical Society
Education Office
(406) 444-4789
www.montanahistoricalsociety.org

Funded by a Grant from the E.L. Wiegand Foundation

©2002 The Montana Historical Society

Table of Contents

I. Introduction

Inventory 2

Footlocker Use – Some Advice for Instructors 6

Evaluation Form 7

MHS Educational Resources 9

Primary Sources and How to Use Them 13

Standards and Skills for
East Meets West: The Chinese Experience in Montana 20

II. Background Information

Historical Narrative for Fourth Graders 22

Historical Narrative for Instructors 24

Outline for Classroom Presentation 26

Amazing Montanans 28

Vocabulary List 30

III. Lessons

Lesson 1: What Would You Bring? 31

Lesson 2: A Long Way to Travel 33

Lesson 3: Chinese Contributions 36

Lesson 4: Letters Home 38

Lesson 5: Boycotts and Racism 39

Lesson 6: Chinese Food 41

Lesson 7: The Chinese Tea Ceremony 43

Lesson 8: A New Way to Count 49

Lesson 9: Bound Feet 55

IV. Resources and Reference Materials

A. Worksheets and Independent Work 58

B. Bibliography 74

Inventory

Borrower: _____ Booking Period: _____

The borrower is responsible for the safe use of the footlocker and all its contents during the designated booking period. Replacement and/or repair for any lost items and/or damage (other than normal wear and tear) to the footlocker and its contents while in the borrower's care will be charged to the borrower's school. **Please have an adult complete the footlocker inventory checklist below, both when you receive the footlocker and when you repack it for shipping, to ensure that all of the contents are intact.** After you inventory the footlocker for shipping to the next location, please mail or fax this completed form to the Education Office.

ITEM	BEFORE USE	AFTER USE	CONDITION OF ITEM	MHS USE
1 bag of wooden chopsticks (Display purposes only. Do not use.)				
1 abacus				
1 package of dried mushrooms (Do not open.)				
1 tin of Chinese tea				
1 pair of lotus slippers				
1 wall hanging				
1 Chinese hat				
1 Chinese shirt				
1 pair of pants				
1 Chinese lantern				
6 bamboo paintbrushes				

ITEM	BEFORE USE	AFTER USE	CONDITION OF ITEM	MHS USE
1 tea pot				
4 tea cups				
1 rice bowl				
1 rice spoon				
1 mounted letter in Chinese with English translation				
10 photographs				
1 book: *Learn to Write Chinese Characters*				
1 book: *Splendid Slippers*				
1 book: *Exploring Chinatown*				
1 video: *From the Far East to the Old West: Chinese and Japanese Settlers in Montana* and study guide				
2 padlocks				
1 User Guide				
1 binder of articles				

Education Office, Montana Historical Society, PO Box 201201, Helena, MT 59620-1201
Fax: 406-444-2696, Phone: 406-444-4789, jkeenan@state.mt.us

Teachers Name _____ Phone number _____

School _____ Footlocker Reservation Dates _____

Footlocker Contents

Left:
Hat, Lotus Slippers,
Chinese Shirt and Pants

Right:
Tea Set, Rice Bowl,
Chopsticks, Rice Spoon

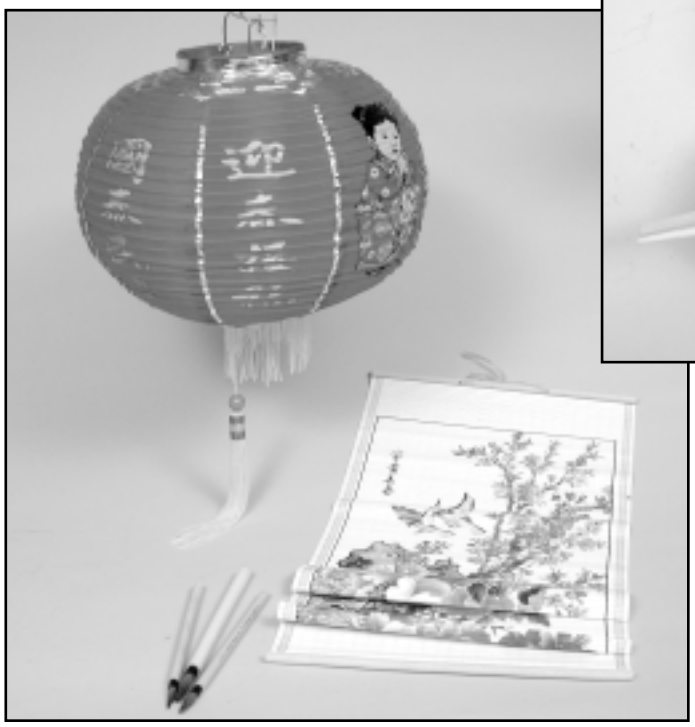

Left:
Chinese Lantern, Bamboo
Paintbrushes, Wall Hanging

(continued)

Left:
Abacus, Dried Mushrooms, Tea

Right:
Articles, Video, Books

Footlocker Use–Some Advice for Instructors

How do I make the best use of the footlocker?

In this User Guide you will find many tools for teaching with objects and primary sources. We have included teacher and student level narratives, as well as a classroom outline, to provide you with background knowledge on the topic. In section one there are introductory worksheets on how to look at/read maps, primary documents, photographs, and artifacts. These will provide you and your students valuable tools for future study. Section three contains lesson plans for exploration of the topic in your classroom—these lessons utilize the objects, photographs, and documents in the footlocker. The "Resources and Reference Materials" section contains short activities and further exploration activities, as well as bibliographies.

What do I do when I receive the footlocker?

IMMEDIATELY upon receiving the footlocker, take an inventory form from the envelope inside and inventory the contents in the "before use" column. Save the form for your "after use" inventory. This helps us keep track of the items in the footlockers, and enables us to trace back and find where an item might have been lost.

What do I do when it is time to send the footlocker on to the next person?

Carefully inventory all of the items again as you put them in the footlocker. If any items show up missing or broken at the next site, your school will be charged for the item(s). Send the inventory form back to:

Education Office, Montana Historical Society, Box 201201, Helena, MT 59620-1201 or fax at (406) 444-2696.

Who do I send the footlocker to?

At the beginning of the month you received a confirmation form from the Education Office. On that form you will find information about to whom to send the footlocker, with a mailing label to affix to the top of the footlocker. Please insure the footlocker for $1000 with UPS (we recommend UPS, as they are easier and more reliable then the US Postal Service) when you mail it. This makes certain that if the footlocker is lost on its way to the next school, UPS will pay for it and not your school.

What do I do if something is missing or broken when the footlocker arrives, or is missing or broken when it leaves my classroom?

If an item is missing or broken when you initially inventory the footlocker, **CONTACT US IMMEDIATELY** (406-444-4789), in addition to sending us the completed (before and after use) inventory form. This allows us to track down the missing item. It may also release your school from the responsibility of paying to replace a missing item. If something is broken during its time in your classroom, please call us and let us know so that we can have you send us the item for repair. If an item turns up missing when you inventory before sending it on, please search your classroom. If you cannot find it, your school will be charged for the missing item.

Footlocker Evaluation Form

Evaluator's Name _____ Footlocker Name _____

School Name _____ Phone _____

Address _____ City _____ Zip Code _____

1. How did you use the material? (choose all that apply)

☐ School-wide exhibit ☐ Classroom exhibit ☐ "Hands-on" classroom discussion

☐ Supplement to curriculum ☐ Other_____

2. How would you describe the audience/viewer? (choose all that apply)

☐ Pre-school students ☐ Grade school—Grade____ ☐ High school—Grade____

☐ College students ☐ Seniors ☐ Mixed groups ☐ Special interest

☐ Other_____

2a. How many people viewed/used the footlocker?_____

3. Which of the footlocker materials were most engaging?

☐ Artifacts ☐ Documents ☐ Photographs ☐ Lessons ☐ Video

☐ Audio Cassette ☐ Books ☐ Slides ☐ Other_____

4. Which of the User Guide materials were most useful?

☐ Narratives ☐ Lessons ☐ Resource Materials ☐ Biographies/Vocabulary
☐ Other_____

5. How many class periods did you devote to using the footlocker?

☐ 1-3 ☐ 4-6 ☐ More than 6 ☐ Other_____

6. What activities or materials would you like to see added to this footlocker?

_____

_____

(continued)

7. Would you request this footlocker again? If not, why?

_____

_____

_____

_____

8. What subject areas do you think should be addressed in future footlockers?

_____

_____

_____

_____

_____

9. What were the least useful aspects of the footlocker/User Guide?

_____

_____

_____

_____

_____

10. Other comments.

_____

_____

_____

_____

_____

Montana Historical Society Educational Resources Footlockers, Slides, and Videos

Footlockers

Stones and Bones: Prehistoric Tools from Montana's Past— Explores Montana's prehistory and archaeology through a study of reproduction stone and bone tools. Contains casts and reproductions from the Anzick collection.

Daily Life on the Plains: 1820-1900— Developed by Montana Fish, Wildlife, and Parks, this footlocker includes items used by American Indians, such as a painted deerskin robe, parfleche, war regalia case, shield, Indian games, and many creative and educational curriculum materials.

Discover the Corps of Discovery: The Lewis and Clark Expedition in Montana— Investigates the Corps' journey through Montana and their encounters with American Indians. Includes a Grizzly hide, trade goods, books, and more!

Cavalry and Infantry: The U.S. Military on the Montana Frontier— Illustrates the function of the U. S. military and the life of an enlisted man on Montana's frontier, 1860 to 1890.

From Traps to Caps: The Montana Fur Trade— Gives students a glimpse at how fur traders, 1810-1860, lived and made their living along the creeks and valleys of Montana.

Inside and Outside the Home: Homesteading in Montana 1900-1920— Focuses on the thousands of people who came to Montana's plains in the early 20th century in hope of make a living through dry-land farming.

Prehistoric Life in Montana— Explores Montana prehistory and archaeology through a study of the Pictograph Cave prehistoric site.

Gold, Silver, and Coal—Oh My!: Mining Montana's Wealth— Lets students consider what drew so many people to Montana in the 19th century and how the mining industry developed and declined.

Coming to Montana: Immigrants from Around the World— Montana, not unlike the rest of America, is a land of immigrants, people who came from all over the world in search of their fortunes and a better way of life. This footlocker showcases the culture, countries, traditions, and foodways of these immigrants through reproduction artifacts, clothing, toys, and activities.

(continued)

Montana Indians: 1860-1920— Continues the story of Montana's First People during the time when miners, ranchers, and the military came West and conflicted with the Indians' traditional ways of life.

Woolies and Whinnies: The Sheep and Cattle Industry in Montana—Looks at the fascinating stories of cattle, horse, and sheep ranching in Montana from 1870 to 1920.

The Cowboy Artist: A View of Montana History— Over 40 Charles M. Russell prints, a slide show, cowboy songs, and hands-on artifacts are used as a window into Montana history. Lessons discuss Russell's art and how he interpreted aspects of Montana history, including the Lewis and Clark expedition, cowboy and western life, and Montana's Indians. Students will learn art appreciation skills and learn how to interpret paintings, in addition to creating their own masterpieces on Montana history topics.

The Treasure Chest: A Look at the Montana State Symbols—The Grizzly Bear, Cutthroat Trout, Bitterroot, and all of the other state's symbols are an important connection to Montana's history. This footlocker will provide students the opportunity to explore hands-on educational activities to gain a greater appreciation of our state's symbols and their meanings.

Lifeways of Montana's First People—Contains reproduction artifacts and contemporary American Indian objects, as well as lessons that focus on the lifeways of the five tribes (Salish, Blackfeet, Nez Perce, Shoshone, and Crow) who utilized the land we now know as Montana in the years around 1800. Lessons will focus on aspects of the tribes' lifeways prior to the Corps of Discovery's expedition, and an encounter with the Corps.

East Meets West: The Chinese Experience in Montana— The Chinese were one of the largest groups of immigrants that flocked in to Montana during the 1800s in search of gold, however only a few remain today. Lessons explore who came to Montana and why, the customs that they brought with them to America, how they contributed to Montana communities, and why they left.

Architecture: It's All Around You— In every town and city, Montana is rich in historic architecture. This footlocker explores the different architectural styles and elements of buildings, including barns, grain elevators, railroad stations, houses, and stores, plus ways in which we can keep those buildings around for future generations.

Tools of the Trade: Montana Industry and Technology— Explores the evolution of tools and technology in Montana from the 1600's to the present. Includes reproduction artifacts that represent tools from various trades, including: the timber and mining industries, fur trapping, railroad, ranching and farming, and the tourism industry.

(continued)

SLIDES

Children in Montana— presents life in Montana during the late 1800s and early 1900s through images of children and their written reminiscences.

Fight for Statehood and Montana's Capital— outlines how Montana struggled to become a state and to select its capital city.

Frontier Towns— illustrates the development, character, and design of early Montana communities.

Jeannette Rankin: Woman of Peace— presents the life and political influence of the first woman elected to Congress.

Native Americans Lose Their Lands— examines the painful transition for native peoples to reservations.

Power Politics in Montana— covers the period of 1889 to the First World War when Montana politics were influenced most by the copper industry.

The Depression in Montana— examines the impact of the Depression and the federal response to the Depression in Montana.

The Energy Industry— discusses the history and future of the energy industry in Montana.

Transportation— describes how people traveled in each era of Montana's development and why transportation has so influenced our history.

(continued)

VIDEOS

Capitol Restoration Video— shows the history, art, and architecture of Montana's State Capitol prior to the 1999 restoration. Created by students at Capital High School in Helena.

"I'll ride that horse!" Montana Women Bronc Riders— Montana is the home of a rich tradition of women bronc riders who learned to rope, break, and ride wild horses. Their skill and daring as horsewomen easily led to riding broncs on rodeo circuits around the world. Listen to some to the fascinating women tell their inspiring stories.

Montana: 1492— Montana's Native Americans describe the lifeways of their early ancestors.

People of the Hearth— features the role of the hearth in the lives of southwestern Montana's Paleoindians.

Russell and His Work— depicts the life and art of Montana's cowboy artist, Charles M. Russell.

The Sheepeaters: Keepers of the Past— When the first white men visited Yellowstone in the early nineteenth century, a group of reclusive Shoshone-speaking Indians known as the Sheepeaters inhabited the Plateau. They had neither guns nor horses and lived a stone-age lifestyle, hunting Rocky Mountain Bighorn sheep for food and clothing. Modern archaeology and anthropology along with firsthand accounts of trappers and explorers help to tell the story of the Sheepeaters.

Primary Sources and How to Use Them

The Montana Historical Society Education Office has prepared a series of worksheets to introduce you and your students to the techniques of investigating historical items: artifacts, documents, maps, and photographs. The worksheets introduce students to the common practice of using artifacts, documents, maps, and photographs to reveal historical information. Through the use of these worksheets, students will acquire skills that will help them better understand the lessons in the User Guide. Students will also be able to take these skills with them to future learning, i.e. research and museum visits. These worksheets help unveil the secrets of artifacts, documents, maps, and photographs.

MONTANA HISTORICAL SOCIETY

See the examples below for insight into using these worksheets.

Artifacts

Pictured at left is an elk-handled spoon, one of 50,000 artifacts preserved by the Montana Historical Society Museum. Here are some things we can decipher just by observing it: It was hand-carved from an animal horn. It looks very delicate.

From these observations, we might conclude that the spoon was probably not for everyday use, but for special occasions. Further research has told us that it was made by a Sioux Indian around 1900. This artifact tells us that the Sioux people carved ornamental items, they used spoons, and they had a spiritual relationship with elk.

Photographs

This photograph is one of 350,000 in the Montana Historical Society Photographic Archives. After looking at the photograph, some of the small "secrets" that we can find in it include: the shadow of the photographer, the rough fence in the background, the belt on the woman's skirt, and the English-style riding saddle.

Questions that might be asked of the woman in the photo are: Does it take a lot of balance to stand on a horse, is it hard? Was it a hot day? Why are you using an English-style riding saddle?

MONTANA HISTORICAL SOCIETY

(continued)

MONTANA HISTORICAL SOCIETY

Documents

This document is part of the Montana Historical Society's archival collection. Reading the document can give us a lot of information: It is an oath pledging to catch thieves. It was signed by 23 men in December of 1863. It mentions secrecy, so obviously this document was only meant to be read by the signers.

Further investigation tell us that this is the original Vigilante Oath signed by the Virginia City Vigilantes in 1863. The two things this document tell us about life in Montana in the 1860s are: there were lots of thieves in Virginia City and that traditional law enforcement was not enough, so citizens took to vigilance to clean up their community.

Maps

This map is part of the map collection of the Library of Congress. Information that can be gathered from observing the map includes: The subject of the map is the northwestern region of the United States—west of the Mississippi River. The map is dated 1810 and was drawn by William Clark. The three things that are important about this map are: it shows that there is no all-water route to the Pacific Ocean, it documents the Rocky Mountains, and it shows the many tributaries of the Missouri River.

LIBRARY OF CONGRESS

How to Look at an Artifact

(Adapted from the National Archives and Records Administration Artifact Analysis Worksheet.)

Artifact: An object produced or shaped by human workmanship of archaeological or historical interest.

1. What materials were used to make this artifact?

☐ Bone	☐ Wood	☐ Glass	☐ Cotton
☐ Pottery	☐ Stone	☐ Paper	☐ Plastic
☐ Metal	☐ Leather	☐ Cardboard	☐ Other_____

2. Describe how it looks and feels:

Shape _____

Color _____

Texture _____

Size _____

Weight _____

Moveable Parts _____

Anything written, printed, or stamped on it

_____

Draw and color pictures of the object from the top, bottom, and side views.

Top	Bottom	Side

(continued)

3. Uses of the Artifacts.

A. How was this artifact used? _____

B. Who might have used it? _____

C. When might it have been used? _____

D. Can you name a similar item used today? _____

4. Sketch the object you listed in question 3.D.

5. Classroom Discussion

A. What does the artifact tell us about technology of the time in which it was made and used?

_____

_____

B. What does the artifact tell us about the life and times of the people who made and used it?

_____

_____

How to Look at a Photograph

(Adapted from the National Archives and Records Administration Photograph Analysis Worksheet.)

Photograph: an image recorded by a camera and reproduced on a photosensitive surface.

1. **Spend some time looking at the whole photograph. Now look at the smallest thing in the photograph that you can find.**

   What secrets do you see? _____

   _____

   _____

2. **Can you find people, objects, or activities in the photograph? List them below.**

   People _____

   _____

   Objects _____

   _____

   Activities _____

   _____

3. **What questions would you like to ask of one of the people in the photograph?**

   _____

   _____

4. **Where could you find the answers to your questions?**

   _____

   _____

How to Look at a Written Document

(Adapted from the National Archives and Records Administration Written Analysis Worksheet.)

Document: A written paper bearing the original, official, or legal form of something and which can be used to furnish decisive evidence or information.

1. Type of document:

☐ Newspaper ☐ Journal ☐ Press Release ☐ Diary
☐ Letter ☐ Map ☐ Advertisement ☐ Census Record
☐ Patent ☐ Telegram ☐ Other_____

2. Which of the following is on the document:

☐ Letterhead ☐ Typed Letters ☐ Stamps
☐ Handwriting ☐ Seal ☐ Other _____

3. Date or dates of document:_____

4. Author or creator:_____

5. Who was supposed to read the document? _____

_____

6. List two things the author said that you think are important:

1. _____

2. _____

7. List two things this document tells you about life in Montana at the time it was written:

1. _____

2. _____

8. Write a question to the author left unanswered by the document:

_____

_____

How to Look at a Map

(Adapted from the National Archives and Records Administration Map Analysis Worksheet.)

Map: A representation of a region of the earth or stars.

1. What is the subject of the map?

☐ River ☐ Stars/Sky ☐ Mountains
☐ Prairie ☐ Town ☐ Other _____

2. Which of the following items is on the map?

☐ Compass ☐ Scale ☐ Name of mapmaker
☐ Date ☐ Key ☐ Other _____
☐ Notes ☐ Title

3. Date of map: _____

4. Mapmaker: _____

5. Where was the map made: _____

6. List three things on this map that you think are important: _____

_____

_____

_____

7. Why do you think this map was drawn? _____

_____

8. Write a question to the mapmaker that is left unanswered by the map.

_____

Standards and Skills

State 4th Grade Social Studies Standards

Lesson Number:	**1**	**2**	**3**	**4**	**5**	**6**	**7**	**8**	**9**
Students access, synthesize, and evaluate information to communicate and apply social studies knowledge to real world situations.	✔	✔	✔	✔	✔	✔	✔	✔	✔
Students analyze how people create and change structures of power, authority, and governance to understand the operation of government and to demonstrate civic responsibility.		✔	✔		✔				
Students apply geographic knowledge and skill (e.g., location, place, human/environment interactions, movement, and regions).	✔	✔	✔						
Students demonstrate an understanding of the effects of time, continuity, and change on historical and future perspectives and relationships.		✔	✔	✔	✔			✔	✔
Students make informed decisions based on an understanding of the economic principles of production, distribution, exchange, and consumption.	✔	✔	✔		✔				
Students demonstrate an understanding of the impact of human interaction and cultural diversity on societies.	✔	✔	✔	✔	✔	✔	✔	✔	✔

(continued)

Skill Areas

Lesson Number:	**1**	**2**	**3**	**4**	**5**	**6**	**7**	**8**	**9**
Using primary documents		✔	✔	✔	✔				✔
Using objects	✔	✔				✔	✔	✔	✔
Using photographs			✔	✔	✔				✔
Art	✔								
Science									
Math								✔	
Reading/writing	✔		✔	✔	✔		✔	✔	✔
Map Skills	✔	✔				✔			
Drama, performance, re-creation									
Group work			✔					✔	
Research			✔						
Music									
Bodily/Kinesthetic						✔		✔	
Field Trip						✔			

Historical Narrative for Fourth Graders

Why They Came

Most of the Chinese who came to America were from a province called Kwangtung, located in the southern part of China. It took over a month via ship to travel the distance between China and America—a trip that cost $50. Many Chinese came to Montana and the West in search of gold. They were headed to a place called "Gum San" (Gold Mountain) where they were told they would find gold nuggets the size of oranges. Problems in China forced many to leave. During the Taiping Rebellion, more than 20 million people died. Comparatively, only one million people died during the Civil War in America. Drought and further fighting also helped thousands of Chinese men make their decision to come to America. They wanted to make their fortune in America during the Gold Rush and help their families by sending money back home.

The 1870 Montana census records about 2,400 Chinese living in Montana. In the city of Butte alone, there were 98 Chinese in 1870. Chinese men came to the United States, and especially Montana, in search of gold during the Gold Rush. After the rush ended, many stayed in Montana as railroad workers or opened their own laundry or shops that provided Chinese food, herbs, newspapers, and companionship to visit with other Chinese and chat about their homeland.

Chinese Men and Women

There were many more Chinese men than women in Montana during the 19th and early 20th centuries. Some of the earliest Chinese women in Montana were either prostitutes, sold by their families in China, or wives of wealthy businessmen who had the money to pay their traveling expenses. Due to the expensive $50 travel cost, only wealthy Chinese men were able to afford Chinese wives. Few Chinese men married outside their race - it was illegal to do so after 1909, according to Montana law.

Mining and the Railroad

Chinese miners often worked on placer mines that had already been worked by white miners. After the bust of the Gold Rush, the Chinese helped build railroads. For example, many Chinese moved to Montana to help build the Northern Pacific in the 1880s. At one time there were over 12,000 Chinese railroad workers in Montana. They worked for half the wage a white railroad worker was paid, receiving only $1 a day. However, it was much more than they could make back in their homeland of China. Chinese workers were generally used for the very difficult and risky jobs associated with the railroad. But because the money was so good, they were very interested in undertaking such risks.

MONTANA HISTORICAL SOCIETY

Interior of a Chinese Temple, Virginia City, Montana, no date.

continued

After the Railroad

Once the railroad was built, many Chinese decided to stay in Montana. They chose small businesses that didn't require a lot of money to start. Some became tailors, ranch cooks, gardeners, woodcutters, vegetable growers, and herbal doctors. Others opened laundries and restaurants.

Chinese Customs and Religion

Other Montana immigrants considered Chinese to be exotic heathens. They dressed and talked strangely, and wore their hair in long braids like women or Indians. Most Americans and other immigrants did not know that Chinese men were required to wear their hair this way in China as a sign of loyalty and, if they refused, were put to death. Few white "Christian" settlers realized that among the "heathen Chinese," there was a large number of devout Christians who had been converted by missionaries before leaving China.

Their diet was strange to men who ate a "heart-healthy" fare of meat mixed with flour, beans or bread. One anti-Chinese petition argued that the Chinese should be deported because "they eat rice, fish and vegetables and that otherwise their diet differs from that of the white man." Chinese railroad workers who demanded hot tea to drink were laughed at until those who made fun of them became sick after drinking unboiled groundwater. Chinese were denounced for their use of opium by the same folks who used American medicines laced with strong drugs and drank whiskey to relieve physical and emotional pain.

The ignorance by Americans and other immigrants was made legal throughout the West by laws that punished only Chinese. Chinese in Montana were not allowed to become citizens, vote, own property, or marry non-Chinese after 1909. Special taxes were created that only applied to Chinese who owned laundries or worked as miners. Many newspapers often discriminated against the Chinese.

The first reported hanging in Butte was of a Chinese miner hung by Dan Haffie because the Chinese man seemed to be getting all of the luck in the diggings on Silver Bow Creek. There is no record of whether Haffie's luck improved after he hung his Chinese neighbor.

Federal laws from 1882 until 1943 placed the burden on the individual to prove why they should not be deported to China and random arrests were frequent. Chinatowns, that offered some sanctuary from discrimination as well as a common culture, sprang up in the larger towns of the state.

In Alder Gulch, about 500 Chinese miners built a Chinatown in Virginia City with a two-story wooden religious temple. As the gold boom faded there, many of the Chinese moved on to mining camps where the diggings were still paying off or they started businesses in growing towns like Anaconda, Billings, Butte, Deer Lodge, Dillon, and Helena. Butte was home to Montana's largest Chinese community despite organized efforts to evict them. By 1910, Butte's Chinese population had grown to 2,532, according to Rose Hum Lee, who wrote the book *The Chinese in the United States of America*. She was born and raised in Butte.

As labor unions gained strength in the 1880s and the 1890s, they organized boycotts to evict Chinese businesses. In the winter of 1896-1897, anti-Chinese union members blocked doorways and discouraged customers from entering Chinese restaurants and laundries. As the boycott went on, some Chinese feared the violence that had already erupted in riots against Chinese in Tacoma, Washington, Denver, Colorado, and Rock Springs, Wyoming and they decided to leave for the safety of larger Chinatowns on the west coast. In Anaconda, violence did erupt with at least one Chinese laundry being bombed in 1890.

Today there are very few Chinese left in Montana, but they left a wonderful legacy of hard work and dedication.

Source: Mai Wah Society website

Historical Narrative for Instructors

Why They Came

Most of the Chinese who came to America were from a province called Kwangtung, located in the southern part of China. It took over a month via ship to travel the distance—a trip that cost $50. Many Chinese came to Montana and the West in search of gold. They were headed to a place called "Gum San" (Gold Mountain) where they were told they would find gold nuggets the size of oranges. Although there was a strong push to find gold in the Americas, another reason for making the long trip was the chaos of late 19th century China. During the Taiping Rebellion, led by Hong Xiuquan – a Chinese man who thought he was the older brother of Jesus Christ – more than 20 million people died. (To put this number into perspective, only 1 million people died during the Civil War in America.) Drought and further fighting also helped thousands of Chinese men make their decision to come to America. They wanted to make their fortune in America and help their families by sending money back home.

The 1870 Montana census recorded approximately 2,400 Chinese living in Montana. In the city of Butte alone, there were 98 Chinese in 1870. Chinese men came to the United States, and especially to Montana, in search of gold during the Gold Rush. After the rush ended, many stayed on as railroad workers or opened their own laundry or shops that provided Chinese food, herbs, newspapers, and companionship for other Chinese in America to visit and chat about their homeland.

Chinese Men and Women

Chinese men far outnumbered women in the 19th and early 20th centuries. Some of the earliest Chinese women in Montana were either prostitutes, sold by their families in China, or wives of wealthy businessmen, who had the money to pay their traveling expenses. Few Chinese men married outside their race, as it was illegal to do so after 1909 according to Montana law.

Mining and the Railroad

Chinese miners worked almost exclusively on placer mines that had already been worked by white miners. After the bust of the Gold Rush, the Chinese helped build railroads. For example, many Chinese moved to Montana to help build the Northern Pacific in the 1880s. At one time there were over 12,000 Chinese railroad workers in Montana. They worked for half the wage a white railroad worker was paid, receiving only $1 a day. However, it was much more than they could make back in their homeland of China. Chinese workers were generally used for the very difficult and risky jobs associated with the railroad. But because the money was so good, they were very interested in undertaking such risks.

After the Railroad

Once the railroad was built, many Chinese decided to stay in Montana. They chose small businesses that didn't require a lot of capital and often didn't require them to rely on an employer for their income. Some became tailors, ranch cooks, gardeners, woodcutters, vegetable growers, and herbal doctors. Others opened laundries and restaurants.

Chinese Customs and Religion

Other settlers considered Chinese to be exotic and inscrutable heathens. They dressed and talked strangely, and wore their hair in long braids like women or Indians. Few could imagine that they were required to

continued

wear their hair this way in China as a sign of loyalty. If a Chinese man refused to wear his hair in a braid, the penalty was death. Few white "Christian" settlers realized that among the "heathen Chinese," was a large number of devout Christians who had been converted by missionaries before leaving China.

Their diet was strange to men who ate a "heart-healthy" fare of meat mixed with flour, beans or bread. One petition argued that the Chinese should be deported because "they eat rice, fish, and vegetables and that otherwise their diet differs from that of the white man." Chinese railroad workers who demanded hot tea to drink were laughed at, until those who scoffed became ill from dysentery after drinking unboiled groundwater. Chinese were denounced for their use of opium by the same folks who used patent medicines laced with laudanum and morphine and drank whiskey straight to relieve physical and emotional pain.

Unlike simple prejudice, however, this ignorance was validated throughout the West by discriminatory laws that punished only Chinese. Chinese in Montana were not allowed to become citizens, vote, own property, or marry non-Chinese after 1909. Special taxes were levied that only applied to Chinese who owned laundries or worked as miners. These laws encouraged many to act on their prejudices with impunity. The newspapers of the day abound with reports of beatings and harassment against Chinese.

The first reported hanging in Butte was of a Chinese miner hung by Dan Haffie because the Chinaman seemed to be getting all of the luck in the diggings on Silver Bow Creek. There is no record of whether Haffie's luck improved after he hung his Chinese neighbor.

Federal laws from 1882 until 1943 placed the burden on the individual to prove why they should not be deported to China and random arrests and interrogations were frequent.

Chinatowns, offering sanctuary from discrimination as well as a common culture, sprang up in the larger towns of the state.

In Alder Gulch, about 500 Chinese miners built a Chinatown in Virginia City with a two-story wooden religious temple. As the gold boom faded there, many of the Chinese moved on to mining camps where the diggings were still paying off or they started businesses in growing towns like Anaconda, Billings, Butte, Deer Lodge, Dillon, and Helena. Butte was home to Montana's largest Chinese community despite organized efforts to evict them. By 1910, Butte's Chinese population had grown to 2,532, according to Rose Hum Lee, who wrote *The Chinese in the United States of America.* She was born and raised in Butte.

As labor unions gained strength in the 1880s and the 1890s, they organized boycotts to evict Chinese businesses. In the winter of 1896-1897, union members blocked doorways and discouraged customers from entering Chinese restaurants and laundries. As the boycott went on, some Chinese feared the violence that had already erupted in riots against Chinese in Tacoma, Washington, Denver, Colorado, and Rock Springs, Wyoming and they decided to leave for the safety of larger Chinatowns on the west coast. In Anaconda, violence did erupt with at least one Chinese laundry being bombed in 1890. Hundreds of Chinese immigrants ended up leaving Montana, fearing for their lives.

Today there are very few Chinese left in Montana, but their predecessors left a wonderful legacy of hard work and dedication.

Source: Mai Wah Society website

Outline for Classroom Presentation

I. Problems in China

A. 1839-1842
Opium War in China

B. 1847
Floods in China resulted in rice crop failure, increased poverty, and starvation.

C. 1850-1878
Population increased in Kwangtung province from 16 million in 1850 to 28 million in 1878.

D. 1851-1864
Taiping Rebellion – 20 million people die

II. Chinese Immigrate to the U.S.

A. 1848-1853
Gold Rush lures many people, including Chinese workers to the U.S.

B. 1868
Wa Chong Company merchandise store opened in Seattle.

C. 1860-1916
Chinese mined German Gulch area near Butte.

D. 1863-1869
Chinese contracted to work on transcontinental railroad.

E. 1869
Completion of first transcontinental railroad; 10,000 Chinese workers left without work.

F. 1890
Wah Chong Tai mercantile built in Butte.

G. 1909
Mai Wah building was constructed in Butte's Chinatown.

III. Chinese Discrimination

A. 1870-1906
Period of national anti-Chinese sentiment and violence.

B. 1878
United States Supreme Court denied Chinese the right to become naturalized citizens.

C. 1882
Chinese Exclusion Act prohibited further immigration of Chinese laborers to the United States.

(continued)

D. 1888
Scott Act prohibited re-entry of Chinese laborers who had previously left the country.

E. 1890
Butte's Chinese population reduced to 403 from several thousand in 1870.

F. 1895-1906
Height of anti-Chinese sentiment in Butte included boycott of Chinese businesses and discriminatory city and state laws.

G. 1949
People's Republic of China under Chairman Mao Tse-tung established; U.S. broke off diplomatic ties to mainland China.

IV. Lessening of Chinese Discrimination in U.S.

A. 1898
U.S. Supreme Court ruled American born children of Chinese immigrants were legal citizens.

B. 1900
Chinese proprietors Hum Fay, Dear Yick, Hum Tong, and Dr. Huie Pock win the suit against labor unions for boycott.

C. 1915
Chinese American Citizen's Alliance formed to protect civil rights of Chinese in U.S.

D. 1943
Chinese Exclusion Act repealed and national origin quotas established.

E. 1960
Civil Rights Movement, Asian American Student Movement

F. 1965
Immigration and Naturalization Act abolished national origin quota and substituted it with hemispheric quotas. China and Taiwan shared a quota of 20,000.

IV. Chinese Population in Butte, Montana

A. 1880
Height of Butte's Chinatown, nearly 600 Chinese lived in Butte.

B. 1890
Butte's Chinese population reduced to 403.

C. 1900
Chinese population in Butte is 280.

D. 1910
Chinese population in Butte is 281, less than 1% of the city's total population of 39,000.

E. 1920
Butte's Chinese population reduced to 240.

F. 1930
Only 148 Chinese remain in Butte.

Amazing Montanans—Biographies

Dr. Huie Pock

MONTANA HISTORICAL SOCIETY

Dr. Huie Pock, October 15, 1914, Butte, Montana

I came over to the United States when I was older than most Chinese men. I was already a well-established physician in China, but decided to make the long trip to the United State, in particular Montana, because I heard that the many Chinese workers needed Chinese physicians.

It was hard starting out as a Chinese physician in Butte, Montana during the 1800s because so many white Americans looked down on us Chinese and discriminated against us. But I ended up being a well-respected and even quite wealthy man in Butte.

Chinese medicine and acupuncture was thousands of years old in the late 1800s and I brought not only my knowledge of its power, but also many of the ingredients like Chinese herbs necessary to make the remedies. I cured many Chinese people from simple to very complex ailments in Butte. After a while, some of the white Americans even began getting treated by me. I enjoyed meeting new people and helping anyone that I could.

In the early 1900s I saved a very sick and wealthy young woman – the daughter of William Andrews Clark, one of the Butte Copper Kings. She had a terrible ulcer that I was able to successfully cure with an herbal poultice made from banana stalks. You might be wondering how I got these to Butte? The local mercantile store had a good shipping system, where anything that I needed could be sent to me.

But in 1918 my reputation as a well-established physician was greatly boosted when I helped to save many men from a terrible influenza (flu) epidemic. During that year, hundreds of people, who would not visit my practice to receive the effective herbal treatment, died.

Although I was a very skilled physician, I could not save my wife, Chong Chie Huie, who died in 1923 after eating food from a can with botulism (an extremely dangerous food poisoning caused by harmful bacteria). I was very sad about my wife's death. She was peacefully buried in the Chinese section of Butte's Mount Moriah Cemetery. I had hoped that she would be returned to our native China, but since Butte became home to us, it is a good final resting place.

Amazing Montanans—Biographies

Chinese Woman

MONTANA HISTORICAL SOCIETY

Soo Ling, Virginia City, Montana, August 1899. (Soo Ling is not the woman in the biography, as it is a composite of many womens' stories.)

People around here call me Polly. That's not my real name, but everyone has a hard time pronouncing Chinese names, so most Chinese women are called Polly. I was born in a very small province in China in 1852. My family was very poor – at one time we raised sheep and then we tried to raise grains, but it was very hard due to the poor soil and harsh weather.

When I was 18 years old my father sold me to a band of bandits in exchange for one sack of seed. I was very sad to leave my family and I didn't know where I was going to end up. The last words my father said to me was, "Obey my husband," as he handed me a traditional wedding veil. The clothes on my back and this veil were all that I owned.

After a very long trip on a ship for many days, I arrived in San Francisco. From San Francisco I traveled to Montana on horseback with a Chinese cowboy. It was nice to have someone to talk to on that long trip from California to Montana. That trip took almost two weeks. A man from China, who was very wealthy from the gold mines, bought me sight unseen for $2,500 to make me his wife. That sure was a lot of money in those days, but he had to pay for my travel, which was expensive. Most of the Chinese in the United States during the 1850s—early 1900s were men. Many Chinese men wanted Chinese wives, but it cost so much to bring us over. So they had to work very hard and save their money.

When I arrived in the United States, I couldn't speak any English and I was very confused – so many different sights, smells, and sounds. The people looked different, the buildings were strange, and the food was unlike anything I had ever tasted. But I learned quickly about the white man's culture and language.

I married and had three children. Our children grew up in and remained in Montana, never visiting China. But we taught our children about their Chinese culture, teaching them to speak and write Chinese, about our customs, and national foods. Although I didn't know my husband before we married, we lived a long and happy life in Montana, at times dreaming of China and the lives we left behind.

Vocabulary List

Abacus – frame with beads sliding back and forth on wires or in slots, for doing or teaching arithmetic of the decimal system.

Arithmetic – addition, subtraction, multiplication or division.

Black Tea – a dark tea, the leaf of which is fully fermented before drying.

Boycott – to abstain from buying or using a product or something from particular individuals.

Census – an official count of the population with details as to age, sex, occupation, age, and race.

Chinatown – the main Chinese district in any town outside of China.

Concubine – a woman who is a secondary wife to a married Chinese man.

Discrimination – treatment of, or making a distinction in favor of or against, a person based on the group, class or race to which that person belongs.

Distilled – to purify or refine, to make clean.

Fermented – Any of a group of chemical reactions induced by living or nonliving organisms that cause something to ferment (to break down chemically).

Foot Binding – an old Chinese custom of wrapping a girl's feet so that they would not grow.

Gentility – "of gentle birth" and refinement, of upper-class status.

Green Tea – tea made from leaves that are not fermented before being dried.

Heathen – an unconverted individual or group that do not acknowledge the God of the Bible; not Christian.

Homeland – one's native land.

Immigrant – a person who has come to a foreign country to live.

Infusion – the liquid product obtained by infusing (to steep or soak without boiling).

Lucrative – producing wealth, profitable.

Mincing – walking or moving with short, affectedly dainty steps.

Opium – the dried, condensed juice of a poppy flower, that has a narcotic effect, which was used as medicine.

Placer – a deposit of sand or soil containing eroded particles of precious minerals.

Placer Mining – getting minerals or metals such as gold from placers through washing.

Race – a group of people related by common descent or heredity.

Restrictive – confined or kept within limits.

Steeping – to steep, to soak in liquid in order to cleanse, soften, or extract a given property from.

Lesson 1: What Would You Bring?

Objective:

At the conclusion of the lesson, students will be able to:

- Demonstrate the importance of recording their personal history in a journal.

Time:

Two 45-50 minute classes.

Note: Complete this lesson at the beginning of your study of the Chinese in Montana and utilize the journal throughout the week.

Materials:

- Footlocker Materials: clothing and hat
- User Guide Materials: Journal Activity worksheet
- Teacher Provided Materials: four items you would carry with you on the journey to Montana (two essentials and two to remember your heritage by), paper, construction paper, glue, markers, paper punch, string or yarn

Pre-Lesson Preparation

The trip to Montana for the Chinese, as well as many other immigrants in the 1800s and early 1900s, was very long. Some people had to travel via ship for many months and then spend additional weeks in transit via horseback or wagon to reach their final destination. Not only were trips long, oftentimes there was not much room for people to bring personal items. Maybe there would be room for one small suitcase per person or family, which would not be much room at all! People generally wore the only clothing they brought with them, maybe a few personal items, and things that would remind them of their homeland. But with not a lot of space, they had to be very picky about what they could and could not bring.

Procedure:

1. Show the items you would bring with you on a trip to Montana with the students. Remind students these are items that you must carry with you.
2. Show students the Chinese clothing and hat from the footlocker.
3. Have everyone make a journal using the "Journal Activity" found in the User's Guide. This will take the rest of the class period.
4. During the next class period, ask everyone to take out his or her newly made journal. Tell students they will be immigrating to China. Then ask students to do the following in their journal:
   a. List the two essential things they would take with them to China. Remember, students must carry these items with them.
   b. List the two things to help them remember Montana and the United States and why. Remember, students must carry these items with them.
   c. Draw pictures of these items.
   d. Draw pictures of the animals, plants, people, etc. that they will encounter in China and what the countryside will look like.

Discussion Questions:

1. Have students share their journals. What items did they choose to bring? Are there many similar items? What different items are there?

Journal Making Activity

Materials: 8 sheets of 8.5 x 11 inch white paper per student, construction paper, glue, markers, paper punch, string or yarn, hand-made journals (to use as guides)

Procedure:

1. Ask students to select a piece of construction paper for the cover of their journal. Give them many different colors to choose from. Have them fold the piece of paper in half, lengthwise.
2. Have students decorate their cover with scraps of construction paper and glue, markers, crayons, etc.
3. Pass out 8 sheets of 8.5 x 11 inch white paper per student.
4. Tell students they will be making two "signatures" for their journal. Ask them to fold the sheets in half lengthwise so they will fit inside their construction paper cover. Have them put the signatures inside the cover.
5. Next, tell students they will be making their binding. Have everyone punch three holes in the fold of their journal. After doing this, tell students to secure their binding with yarn.
6. Their journal is complete and ready to be filled!

*Note: For young students, pass out already constructed journals, ready for the cover to be decorated and journaling to begin.

MONTANA HISTORICAL SOCIETY

A Chinese gentleman, Helena, Montana, no date. Notice his clothing and the items on the table next to him.

Lesson 2: A Long Way to Travel

Objectives

At the conclusion of the lesson students will be able to:

- explain why men from China came to the United States in the late 1800s.

Time

Two 45-50 minute class periods.

Materials

- Footlocker Materials: *From the Far East to the Old West* video & Study Guide
- User Guide Materials: Map of Chinese provinces
- Teacher Provided Materials: world and U.S. maps

MONTANA HISTORICAL SOCIETY

Phases of Chinese camp life in Montana depicted in the drawing "A Quiet Game," by artist J. Smith, no date.

Pre-Lesson Preparation

Most of the Chinese who came to America were from a province called Kwangtung, located in the southern part of China. It took over a month via ship to travel the distance - a trip that cost $50 to make. Many Chinese came to Montana and the West in search of gold. They were headed to a place called "Gum San" (Gold Mountain) where they were told they would find gold nuggets the size of oranges. Although there was a strong push to find gold in the Americas, another reason for making the long trip was the chaos of late 19th century China. During the Taiping Rebellion, led by Hong Xiuquan – a Chinese man who thought he was the older brother of Jesus Christ – more than 20 million people died. (To put this number into perspective, only 1 million people died during the Civil War in America). Drought and further fighting also helped thousands of Chinese men make their decision to come to America. They wanted to make their fortune in America and help their families by sending money back home.

The 1870 Montana census records approximately 2,400 Chinese living in Montana. In the city of Butte, there were 98 Chinese miners in 1870. Chinese men came to the United States, and especially Montana, in search of gold during the Gold Rush. After the rush ended, many stayed on as railroad workers or opened their own laundry or shops that provided Chinese food, herbs, newspapers, and companionship for other Chinese in America to visit and chat about their homeland.

(continued)

Chinese men far outnumbered women in the 19th and early 20th centuries. Some of the early Chinese women in Montana were either prostitutes, sold by their families in China, or wives of wealthy businessmen, who had the money to pay their traveling expenses. Few Chinese men married outside their race - it was illegal to do so after 1909, according to Montana law.

Procedure for Class One

1. Put up the world map in the front of your classroom.
2. Have two students come to the front of the room. Ask them to find Kwangtung Province in China, where the majority of Chinese men came to Montana from in the mid to late 1800s. Then ask students to find San Francisco, California on the map.
3. Now ask two other students to come to the front of the class. Ask them to find Helena, Montana.
4. Ask students why they think these Chinese men traveled so far to a foreign country. Have them make a list. Then ask them to list what would make them go on such a long journey. How are these lists similar and different? Have them share with the class.

Procedure for Class Two

1. Watch the Chinese portion of the video *From the Far East to the Old West*, which is approximately 20 minutes long. Use the questions from the *From the Far East to the Old West* study packet to stimulate class discussion. Note: some of the activities are to be done prior to watching the video.

Discussion Questions

1. How did the Chinese men come to San Francisco (via land or water?) Was it a short or long trip in the 1800s? How long did it take? Was it a safe trip? Why or why not?
2. How did the Chinese men travel from San Francisco to Helena? Was it a short or long trip in the 1800s? How long did it take? Was it a safe trip? Why or why not?
3. Ask students what they would do if they were living in China during the mid to late 1800s. Would they travel to the U.S. in search of fortune? Why or why not?
4. Has anyone in the room ever been to China? A foreign country? Out of Montana? How long did it take to get there? Did they think it took a long time? How was their trip similar and different to the trip men from China made? How was it different?

Further Exploration

- Ask students to come prepared to discuss family trees and ancestors. Have each student, with the help of their parents, write down where their grandparents, parents, and even themselves were born. Have each student give a report on where they and their family are from. Have students point out each country and town on a world and U.S. map.
- Does anyone in your town know someone from China or someone who has been to China? Ask them to speak to your class.
- Get on the Internet and determine how long it would take to travel from Kwangtung, China to San Francisco and Kwangtung, China to your hometown in Montana today.
- Have each student do a research project on China via the Internet. Ask students to find out the following during their research:
  a. Language – how to say “hello”, “how are you”, “good bye”, and “I am from China”.
  b. Currency in use today
  c. Capital city
  d. Population today, population in the 1800s
  e. National food
  f. Major industries
  g. National dress
  h. Count from 1-10
  i. Flag

Map of China

N
W
E
S
Russia
Russia
Kazakhstan
Mongolia
Inner Mongolia
Songhua River
Kyrg.
Tajik.
Pakistan
N. Korea
Beijing
Great Wall
Tianjin
PACIFIC OCEAN
CHINA
Yellow River
Shanghai
India
Tibet
Yangtze River
Nepal
Bhutan
India
Taipei
Guangzhou
Pearl River
Taiwan
Myanmar
Vietnam
Hong Kong
Laos
Macau
Hainan
SOUTH CHINA SEA
Key
Water
City
Great Wall
Country border

Lesson 3: Chinese Contributions in Montana

Adapted from lessons created by Kathy J. Doolittle, Corvallis Middle School, April 2000

Objectives

At the conclusion of the lesson students will be able to:

- Discuss the different types of livelihoods of Chinese workers in Montana.

Time:

One 45-50 class period.

Materials

- Footlocker Materials: seven photographs of Chinese workers in Montana
- User Guide Materials: "How to Look at a Photograph" worksheet, "Kwangtung to Big Sky: The Chinese in Montana, 1864-1900" article (see binder labeled "Articles.")
- Teacher Provided Materials: none

MONTANA HISTORICAL SOCIETY

Tim & Susie Lee, outside their home in Pioneer, Montana, February 1927.

Pre-Lesson Preparation

Just like other immigrants, young Chinese workers (mainly men), made the long journey to Montana in search of their fortune – gold. During the Gold Rush, thousands of men came to the United States and settled in states that were rich in gold. But after the Gold Rush, many Chinese stayed on because they found or created lucrative jobs or could not afford to return back to China. The railroad was a major employer of Chinese workers, but many opened their own businesses, such as laundries, restaurants, and mercantiles. Some, such as physicians, came to Montana to open their own practice. The Chinese community, as well as Americans in search of different goods, friendly service, or different medical care, frequented many Chinese businesses.

Procedure:

1. Divide students into three groups. Provide each group with one of three different sections of Robert Swartout, Jr.'s article "Kwangtung to Big Sky: The Chinese in Montana, 1864-1900" (section 1 begins on page 45; section 2 on 47; section 3 on 48). Ask each group to read their part of

(continued)

the article, summarize the information, and be prepared to present the information to the rest of the class.

2. Provide each group with two-three photographs that compliment the section of the article that they have read. Assign one photograph to half of the students; in the group and the other photo to the other half. Then ask students to complete the "How to Look at a Photograph" worksheet on their assigned photograph. In particular, students should study the photograph and find visual examples of the information they have summarized.

3. Have groups share information on the portion article they read and discussed, and of their photograph.

4. For a homework assignment, ask each student to write in his or her journal, assuming the role of a Chinese immigrant— a miner, railroad worker, gardener, cook, or physician. From a first person point of view, what might a day in their life have been like?

MONTANA HISTORICAL SOCIETY

Chinese men working on the O.R.&N. Co. railroad (Oregon Railway and Navigator Co.), 1883.

Discussion Questions

1. Why were Montanans so threatened by Chinese workers? Did it matter what jobs they held? Why or why not?

2. What would you have done as a member of the Chinese community in Montana during the late 1800s and early 1900s?

3. Can you think of other times in American history that similar prejudice and racism have taken place? Why do you think these people were targeted?

4. Can you think of other times in world history that similar prejudice and racism have taken place? Again, why do you think these people were targeted?

Further Exploration

- Use "The Chinese Exclusion Act" activity, in the resource section of the User Guide, to delve further into the topic of racism and boycotting. Note: This activity is not geared exclusively to Montana Chinese, but the entire U.S.

- Get on the Mai Wah Society's website and research prejudice and racism against Chinese in Montana.

Lesson 4: Letters Home

Objectives

At the conclusion of the lesson students will be able to:

- Explain why Chinese men traveled to Montana in search of gold.

Time

One 45-50 class period.

Materials

- Footlocker Materials: photographs of young Chinese men, mounted letter from unidentified Chinese man, bamboo paintbrushes
- User Guide Materials: "Kui Qian, 1887" article, "How to Look at a Written Document" worksheet, "Make a Map" activity
- Teacher Provided Materials: paper and pencils

MONTANA HISTORICAL SOCIETY

Chinese Laundry located next to Huffman Studio in Miles City, Montana, 1882.

Pre-Lesson Preparation

Make copies of the letter (front and back) in Chinese and English.

Procedure:

1. Pass around copies of the letter. Ask students to look at the Chinese writing first before turning the letters to read the English translations.
2. Discuss Chinese calligraphy.
3. Then ask students to turn over the letter and read in English.
4. Have students fill out "How to Look at a Written Document" for the letter.
5. Discuss the letter including the content, when it was written, etc.
6. Ask students to pretend they were Chinese workers in Montana during the late 1800s. Ask them to write a letter home to their parents. They can write the letter in their journal.
7. Have students record their answers to the Discussion Questions and any Further Exploration in their journal.

Discussion Questions

1. What did students write to their parents about? What did they tell their parents - only the good things that have happened to them? What about setbacks or bad things that happened?

Further Exploration

- Utilizing the Chinese calligraphy book from the footlocker, help students learn more about the art of Chinese writing. Have each student practice writing and then write at least one of the words they wrote in their letter home in Chinese.
- Do the "Choosing a Chinese Name" activity located in the User's Guide.
- Do the "Make a Map" activity. Have students pretend they are Chinese immigrants wanting to send a map to their parents along with their letter, showing where they are living and working.

Lesson 5: Boycotts & Racism

Adapted from lessons created by Kathy J. Doolittle, Corvallis Middle School, April 2000.

Objectives

At the conclusion of the lesson students will be able to:

- discuss the outcomes of white racism towards Chinese in Montana and explore the reasons behind the racism.

Time

One 45-50 class period.

Materials

- Footlocker Materials: photograph of hearing Chinese boycott case, *From the Far East to the Old West* video study guide
- User Guide Materials: poem
- Teacher Provided Materials: none

MONTANA HISTORICAL SOCIETY

Hearing Chinese boycott case, Butte, Montana, 1898 between Hum Fay and Frank Baldwin.

Pre-Lesson Preparation

"Labor competition and rising unemployment rates increased national anti-Chinese sentiment near the end of the 19th century. In Butte, anti-Chinese sentiment took the form of a city-wide boycott of Chinese businesses and laborers. The Chinese in Butte sued the labor unions who initiated the boycott and eventually won."

"The completion of the Transcontinental Railroad, labor competition, unemployment, and economic downturns resulted in increased antagonism toward certain groups including the Chinese. 'The 1882 Chinese Exclusion Act' restricted Chinese immigration except for merchants, students, and wives of Chinese merchants. Chinese immigrants were also legally barred from many occupations, courts withdrew legal protections, and acts of violence on the Chinese were committed."

"Montana reflected national attitudes towards the Chinese. In Butte, labor unions and the Chamber of Commerce called for a city-wide boycott of Chinese businesses. Many of Butte's citizens, however, were critical of the boycott and supported the rights of Chinese. The Chinese hired a prominent white lawyer, Colonel W.F. Sanders, and eventually won a suit against the labor unions."

(continued)

"Chinese immigrants were not passive victims to racial discrimination. Nationally the Chinese fought discriminatory laws and practices, taking their struggle for civil rights to the American legal system. However, even when the federal courts recognized the rights of Chinese, the actual experience of many Chinese in states across the nation was often one of discrimination and inequality. As a result of increased hostility, many Chinese sought the safety of larger urban Chinatowns and returned to China."

Excerpted from the Mai Wah Society website.

Procedure:

1. Read the poem by T.J. Favorite aloud to the class.
2. Discuss the poem and the meaning of prejudice and some of its causes.
3. Provide students with copies of boycott fliers from the video study guide. Discuss how a boycott works and why Montanans wanted to boycott Chinese businessmen.
4. Show students the photograph of the boycott hearing and discuss it.
5. Have students record their answers to the Discussion Questions and any Further Exploration activities in their journal.

Discussion Questions

1. Why were Montanans so threatened by Chinese workers? Did it matter what jobs they held? Why or why not?
2. What would you have done as a member of the Chinese community in Montana during the late 1800s and early 1900s?
3. Can you think of other times in American history that similar prejudice and racism have taken place? Why do you think these people were targeted?
4. Can you think of other times in world history that similar prejudice and racism have taken place? Again, why do you think these people were targeted?

Further Exploration

- Use "The Chinese Exclusion Act" activity, in the resource section of the User Guide, to delve further into the topic of racism and boycotting. Note: This activity is not geared exclusively to Montana Chinese, but the entire U.S.
- Get on the Mai Wah Society's website to research prejudice and racism against Chinese in Montana.

Poem by T.J. Favorite

Printed in the *Montana Radiator*, January 27, 1866.

Chinamen, Chinamen, beware of the day,
When the women shall meet thee in the
Battle array!

Ye hopeless professors of salsoda
And soap,
Beware of the fates that await ye,
No hangman's committee with
Ladder and rope,
But the ladies are coming to bate ye.

Ye almond-eyed leather faced murthering
Heathens'
Ye opium and musk stinking
Varmints,
We will not object to your livin' and
Breathin'
But beware of the washing of garments.

To stay or go ye can do as ye chose
To us it don't make any odds
So long as ye keep your hands off
Of the clothes
And keep out of the lather and suds.

Lesson 6: Chinese Food

Objectives

At the conclusion of the lesson students will be able to:

- describe some types of Chinese food;
- use chopsticks.

Time

One 45-50 class period.

Materials

- Footlocker Materials: chopsticks, mushrooms, rice bowl and spoon
- User Guide Materials: chopsticks instructions below, "How to Look at an Artifact" worksheet
- Teacher Provided Materials: world map, cooked rice, other "sticky" foods, chopsticks for student use

MONTANA HISTORICAL SOCIETY

Office of Dr. Huie Pock, physician and surgeon, Butte, Montana.

Pre-Lesson Preparation

Do not use the chopsticks in the footlocker for eating! Please acquire new chopsticks of your own for eating.

Grain is the basic food of China. The word for grain in Chinese is "fan". In northern China the majority of people eat noodles and steamed bread. But in southern China (where most people came to Montana from) the staple food is rice. There are thousands of different types of rice in the world. People in eastern China also eat rice. The preferred utensil in China has been and continues to be chopsticks. People cook and eat with them. Each meal generally begins and ends with tea, and soup is served throughout a meal like a beverage. Each meal usually consists of a large portion of fan and cai, which consists of vegetables, and a little protein – generally fish or tofu.

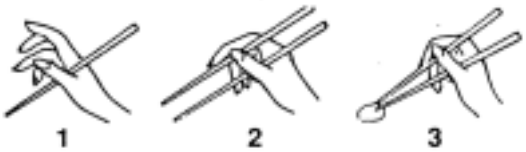

1. Tuck one chopstick under thumb & hold firmly.
2. Hold second chopstick as if it were a pencil.
3. Hold first chopstick in original position and move second one up and down. Now you're ready to handle anything from rice to potstickers.

"With very little available arable land, the agricultural emphasis in most of China has always been toward more efficient food crops rather than livestock. Rice, soybeans, tofu, wheat, gluten, and other grains and legumes have been developed as protein sources for millennia. In China, tradition dictates that meals are prepared with a harmonious balance of all the elements that food can offer – taste, fragrance, texture, appearance, and nutrition." (Sundays at Moosewood Restaurant)

(continued)

Many Americans and immigrants to Montana made fun of Chinese eating habits. Many didn't believe that fish was a "real food" and thought the Chinese were weak because they didn't eat livestock or game meat. Because of essential Omega oils, fish is very healthy, as is the well-balanced diet that most Chinese immigrants ate.

Procedure:

1. Discuss the importance of grain in China and to Chinese Montanans. Utilizing the world map, show where different types of grain are grown in China.
2. Pass out the chopsticks to everyone in your class. Show students how to use chopsticks by utilizing the chopsticks guide.
3. Have students practice using the chopsticks without actually picking anything up. If you have provided the chopsticks be sure to tell them that you'll be using them to eat with, so they should try to keep them off the floor and not pick up anything dirty with them. Do not use the chopsticks from the footlocker to eat with!
4. Bring in enough sticky rice for your class (made the night before). Bring in other "sticky" foods like gummy bears, marshmallows, gum drops, etc. Pass out each type of food and have students try their hand at using the chopsticks. Have students keep track of which foods were easiest and hardest to eat and have a class discussion.
5. Next, pass around the mushrooms. Ask them to complete the "How to Look at an Artifact" sheet located in the User's Guide.
6. View the photo of Dr. Huie Pock's office & store. Do students recognize any of the objects in the photo that we use every day? Any items that are not familiar? What could they be used for?
7. Have students record their answers to the Discussion Questions and any Further Exploration in their journal.

Discussion Questions

1. Which food was easiest to eat? What food was hardest?
2. What foods would be very hard to eat with chopsticks? (jello, pudding, etc.)
3. How are chopsticks and our eating utensils (knife, fork, and spoon) similar and different?

Further Exploration

- Purchase inexpensive chopsticks for each student in your class. Ask them to use chopsticks for one whole day, trying to eat everything that day with them. Have them keep track of which foods were easiest and hardest to eat with them.
- Go on a field trip! Visit a Chinese restaurant and try a wide array of Chinese food. Have students keep track of their favorites and have a discussion of the various types of food you try. If you can't go to the restaurant, do take out!
- Talk about the similarities and differences of Chinese and American foods. Have students get on the Internet to research traditional Chinese foods. Then have students make a list of traditional American foods. How are these foods similar and different?
- Have a Chinese Food Festival! Ask each student, with the help of their parents, to create a dish from China. Invite parents to the festival. Have students give their reports (from Lesson 1) and then have a party sharing all of the wonderful and different foods.
- Have students do the "How to Look at a Photograph" worksheet for the photo of Dr. Huie Pock's office & store.

Lesson 7: Chinese Tea Ceremony

Objectives

At the conclusion of the lesson students will be able to:

- explain a Chinese tea ceremony and their importance in China and to Chinese Montanans.

Time

One 45-50 class period.

Materials

- Footlocker Materials: tea set, photo of Wah Chong Tai Co. Tea Store, tin of tea
- User Guide Materials: Chinese tea and Chinese tea ceremony sheets
- Teacher Provided Materials: different types of Chinese tea (see Chinese tea sheet), hot water, tea pot, additional tea cups or paper cups for tea

MONTANA HISTORICAL SOCIETY

Wah Chong Tai Co. Tea Store, circa 1895, Butte, Montana.

Pre-Lesson Preparation

Read over the information on Chinese tea ceremony located in the User's Guide.

Gather all of the materials necessary for having your own tea ceremony (Chinese tea, tea pot, hot water, additional tea cups or paper cups)

"Of the three major beverages of the world-- tea, coffee and cocoa-- tea is consumed by the largest number of people.

China is the homeland of tea. It is believed that China had tea-shrubs as early as five to six thousand years ago, and human cultivation of tea plants dates back two thousand years. Tea from China, along with her silk and porcelain, began to be known the world over more than a thousand years ago and has since always been an important Chinese export. At present more than forty countries in the world grow tea with Asian countries producing 90% of the world's total output. All tea trees in other countries have their origin directly or indirectly in China. The word for tea leaves or tea as a drink in many countries are derivatives from the Chinese character "cha." The Russians call it "cha'i", which sounds like "chaye" (tea leaves) as it is pronounced in northern

(continued)

China, and the English word "tea" sounds similar to the pronunciation of its counterpart in Xiamen (Amoy). The Japanese character for tea is written exactly the same as it is in Chinese, though pronounced with a slight difference. The habit of tea drinking spread to Japan in the 6th century, but it was not introduced to Europe and America till the 17th and 18th centuries. Now the number of tea drinkers in the world is legion and is still on the increase." (The China Experience)

When Chinese miners in Montana asked for hot tea to drink, white-American miners laughed at them. But when many of the white miners became sick from drinking unboiled ground water, many began to understand why tea was so popular with the Chinese.

Procedure:

1. Carefully take the tea set out of the protective packaging and place it on a table. Ask students to view the tea set and look at it from all sides, but ask them not to touch it. You may want them to complete the "How to Look at an Artifact" worksheet. But be sure to explain to students that this tea set is a replica and not an antique.
2. View the photo of Wah Chong Tai Co. tea store. What items do students recognize? Are there similar items in the photo that are in the footlocker?
3. Have students read the "Chinese Tea Ceremony" and complete the Discussion Questions.
4. Have students record their answers to the Discussion Questions and any Further Exploration in their journal.

Discussion Questions

1. Chinese tea ceremonies are or are not important in China? Why or why not?
2. What does the ceremony emphasize? The tea or the ceremony? Explain your answer.
3. Where is the majority of tea used in Chinese tea ceremonies grown?
4. In your own words, describe the proper way to brew tea for a Chinese tea ceremony.
5. Is water an important part of the tea ceremony? Why or why not?

Further Exploration

- Have a tea ceremony with your class after students have read the "Chinese Tea Ceremony" and answer the Discussion Questions.
- Make up a tea ceremony for your class. What would be most important – the tea? Conversation? Anything else?
- Does anyone know someone from China or someone who knows about tea ceremonies? Invite them to your class to discuss the Chinese ceremony. How about someone from Japan or another Asian country? Ask them to discuss the similarities and differences between their tea ceremony and China's.

China, the Homeland of Tea

Of the three major beverages of the world-- tea, coffee and cocoa-- tea is consumed by the largest number of people.

China is the homeland of tea. It is believed that China had tea-shrubs as early as five to six thousand years ago, and human cultivation of tea plants dates back two thousand years. Tea from China, along with her silk and porcelain, began to be known the world over more than a thousand years ago and has always been an important Chinese export. At present more than forty countries in the world grow tea with Asian countries producing 90% of the world's total output. All tea trees in other countries have their origin directly or indirectly in China. The word for tea leaves or tea as a drink in many countries are derivatives from the Chinese character "cha." The Russians call it "cha'i", which sounds like "chaye" (tea leaves) as it is pronounced in northern China, and the English word "tea" sounds similar to the pronunciation of its counterpart in Xiamen (Amoy). The Japanese character for tea is written exactly the same as it is in Chinese, though pronounced with a slight difference. The habit of tea drinking spread to Japan in the 6th century, but it was not introduced to Europe and America till the 17th and 18th centuries. Now the number of tea drinkers in the world is legion and is still on the increase.

The Categories of Tea

Chinese tea may be classified into five categories according to the different methods by which it is processed.

1) **Green tea:** Green tea is the variety that keeps the original color of the tea leaves without fermentation during processing. This category consists mainly of Longjing tea of Zhejiang Province, Maofeng of Huangshan Mountain in Anhui Province and Biluochun produced in Jiangsu.

2) **Black tea:** Black tea, known as "red tea" (hong cha) in China, is the category which is fermented before baking; it is a later variety developed on the basis of the green tea. The best brands of black tea are Qihong of Anhui, Dianhong of Yunnan, Suhong of Jiangsu, Chuanhong of Sichuan and Huhong of Hunan.

3) **Wulong tea:** This represents a variety half way between the green and the black teas, being made after partial fermentation. It is a specialty from the provinces on China's southeast coast: Fujian, Guangdong and Taiwan.

4) **Compressed tea:** This is the kind of tea that is compressed and hardened into a certain shape. It is good for transport and storage and is mainly supplied to the ethnic minorities living in the border areas of the country. As compressed tea is black in color in its commercial form, so it is also known in China as "black tea". Most of the compressed tea is in the form of bricks; it is, therefore, generally called "brick tea", though it is sometimes also in the form of cakes and bowls. It is mainly produced in Hubei, Hunan, Sichuan and Yunnan provinces.

5) **Scented tea:** This kind of tea is made by mixing fragrant flowers in the tea leaves in the course of processing. The flowers commonly used for this purpose are jasmine and magnolia among others. Jasmine tea is a well-known favorite with the northerners of China and with a growing number of foreigners.

Tea Production

A new tea-plant must grow for five years before its leaves can be picked and, at 30 years of age, it will be too old to be productive. The trunk of the old plant must then be cut off to force new stems to grow out of the roots in the coming year. By repeated rehabilitation in this way, a plant may serve for about l00 years.

For the fertilization of tea gardens, soybean cakes or other varieties of organic manure are generally used, and seldom chemical fertilizers. When pests are discovered, the affected plants will be removed to prevent their spread, and also to avoid the use of pesticides.

The season of tea-picking depends on local climate and varies from area to area. On the shores of West Lake in Hangzhou, where the famous green tea Longjing (Dragon Well) comes from, picking starts from the end of March and lasts through October, altogether 20-30 times from the same plants at intervals of seven to ten days. With a longer interval, the quality of the tea will deteriorate.

A skilled woman picker can only gather 600 grams (a little over a pound) of green tea leaves in a day.

The new leaves must be parched in tea cauldrons. This work, which used to be done manually, has been largely mechanized. Top-grade Dragon Well tea, however, still has to be stir-parched by hand, doing only 250 grams every half hour. The tea-cauldrons are heated electrically to a temperature of about 25°C or 74°F. It takes four pounds of fresh leaves to produce one pound of parched tea.

The best Dragon Well tea is gathered several days before Qingming (Pure Brightness, 5th solar term) when new twigs have just begun to grow and carry "one leaf and a bud." To make one kilogram (2.2 lbs) of finished tea, 60,000 tender leaves have to be plucked. In the old days Dragon Well tea of this grade was meant solely for the imperial household; it was, therefore, known as "tribute tea".

For the processes of grinding, parching, rolling, shaping and drying other grades of tea various machines have been developed and built, turning out about 100 kilograms of finished tea an hour and relieving the workers from much of their drudgery.

China's Tea-Producing Areas

Tea is produced in vast areas of China from Hainan lsland down in the extreme south to Shandong Province in the north, from Tibet in the southwest to Taiwan across the Straits, totaling more than 20 provinces. These may be divided into four major areas:

1) **The Jiangnan area:** It lies south of the middle and lower reaches of the Changjiang (Yangtze) River, and is the most prolific of China's tea-growing areas. Most of its output is the green variety; some black tea is also produced.

2) **The Jiangbei area:** This refers to a large area north of the same river, where the average temperature is 2-3 Centigrade degrees lower than in the Jiangnan area. Green tea is the principal variety turned out there, but Shaanxi and Gansu provinces, which are also parts of this area, produce compressed tea for supply to the minority areas in the Northwest.

3) **The Southwest area:** This embraces Sichuan, Yunnan, Guizhou and Tibet, producing black, green as well as compressed teas. Pu'er tea of Yunnan Province enjoys a good sale in China and abroad.

4) **The Lingnan area:** This area, consisting of the southern provinces of Guangdong, Guangxi, Fujian and taiwan, produces Wulong tea, which is renowned both at home and abroad.

Advantages of Tea-Drinking

Tea has been one of the daily necessities in China since time immemorial. Countless numbers of people like to have their after-meal cup of tea.

In summer or warm climate, tea seems to dispel the heat and bring on instant cool together with a feeling of relaxation. For this reason, tea-houses abound in towns and market villages in South China and provide elderly retirees with the locales to meet and chat over a cup of tea.

Medically, the tea leaf contains a number of chemicals, of which 20-30% is tannic acid, known for its anti-inflammatory and germicidal properties. It also contains an alkaloid (5%, mainly caffeine), a stimulant for the nerve center and the process of metabolism. Tea with the aromatics in it may help resolve meat and fat, and thus promote digestion. It is, therefore, of special importance to people who live mainly on meat, like many of the ethnic minorities in China. A popular proverb among them says, "Rather go without salt for three days than without tea for a single day."

Tea is also rich in various vitamins and, for smokers, it helps to discharge nicotine out of the system.

The above, however, does not go to say that the stronger the tea, the more advantages it will yield. Too much tannic acid will affect the secretion of the gastric juice irritate the membrane of the stomach and cause indigestion or constipation. Strong tea taken just before bedtime will give rise to occasional insomnia. Constant drinking of over-strong tea may induce heart and blood-pressure disorders in some people, reduce the milk of a breast-feeding mother, and put a brown color on the teeth of young people. But it is not difficult to ward off these undesirable effects: just don't make your tea too strong.

From "The China Experience" website: http://www.chinevista.com/experience/tea/tea.html

Chinese Tea Ceremony

The art of drinking and serving tea plays a major cultural role in China. It inspires poetry and songs. Mutual love of tea cements lifelong friendships. For centuries, the ritual of preparing and serving tea has held a special place in the hearts and minds of Chinese aristocracy, court officials, intellectuals and poets.

The Chinese tea ceremony emphasizes the tea, rather than the ceremony -- what the tea tastes like, smells like, and how one tea tastes compared to the previous tea, or in successive rounds of drinking. Ceremony doesn't mean that each server will perform the ritual the same way; it is not related to religion. Each step is meant to be a sensory exploration and appreciation.

Most teas used in the Chinese tea ceremony are grown in the mountains of Taiwan at around 4,000 feet. These teas are particularly refined, such as oolong teas that are lightly fermented and red teas that can be moderately to heavily fermented.

This style of tea-drinking uses small cups to match the small, unglazed clay teapots; each cup is just large enough to hold about two small swallows of tea. These tiny cups are particularly popular in Fujian and Chiujao, in southern coastal China above Canton. In Shanghai and Beijing they use large cups.

To Brew Tea Chinese-style

After heating water to boiling, the teapot first is rinsed with hot water. Using chopsticks or a bamboo tea scoop, fill teapot approximately 1/3 full with tea leaves and then pour boiling water into the pot. Hold the teapot over a large bowl, letting the overflow run into the bowl. Give the tea leaves a rinse by filling the pot half full with hot water, then draining the water out immediately, leaving only the soaked tea leaves. Now fill the pot to the top with more hot water, cover and pour additional water over the teapot resting in the tea bowl. Do not allow bubbles to form in the pot. When mixed with the tea, bubbles form a foam that is not aesthetically pleasing. Be sure to not let the tea steep too long; the first infusion should be steeped for only 30 seconds. In less than a minute, pour the tea into the cups by moving the teapot around in a continual motion over the cups so that they are filled together. Each cup should taste exactly the same.

After steeping, the tea can be poured into a second teapot or tea pitcher to be served at leisure. More water can be added to the teapot, and up to five infusions typically can be made from the same tea leaves. Be sure to add 10 more seconds for the second brewing and 15 additional seconds thereafter.

Each pot of tea serves three to four rounds and up to five or six, depending on the tea and the server. The goal is that each round taste the same as the first. Creating consistent flavor is where the mastery of the server is seen.

Importance of Water

The water used in the tea ceremony is as important as the tea itself. Chlorine and fluoride in tap water should be filtered out as they harm the flavor of the tea. Distilled water makes flat tea and should be avoided. High mineral content in the water brings out the richness and sweetness of green tea. Black teas taste better when made with water containing less Volvic. Ideal tea water should have an alkaline pH around 7.9. Green teas are ruined by boiling water; the temperature is best around 170-185 degrees F. Oolongs made with under-boiled water are more fragrant, which enhances the tea-drinking experience.

From "Holy Mountain Trading Company" website:
http://www.holymtn.com/tea/chinatea.html

Lesson 8: A New Way to Count

Adapted from Chinese Historical and Cultural Project, 1994.

Objectives

At the conclusion of the lesson students will be able to:

- make an abacus and be able to demonstrate simple numbers, addition and subtraction.

Time

One 45-50 minute class period.

Materials

- Footlocker Materials: Abacus
- User Guide Materials: instructions for making Abacus, worksheets
- Teacher Provided Materials: tag board, kite string or yarn, small red and white beads (or salad macaroni), rubbing alcohol, hole punch, staplers.

Pre-Lesson Preparation

People have counted, added and subtracted with an abacus since ancient times. The name comes from the Greek word *abax*, meaning "board" or "calculating table." While there is no actual record of who invented the abacus, it is depicted in a sketchbook written during the Yuan Dynasty (14th Century).

Webster's dictionary defines abacus as a "frame with beads or balls sliding back and forth on wires on in slots, for doing or teaching arithmetic." Arithmetic includes addition, subtraction, multiplication and division. The abacus can also be used to work with fractions and with finding square and cube roots.

The advantage of its use over pencil or pen arithmetic is time. It is faster than writing down the problem and solving it. When working with the abacus one just needs to be accurate. You leave the memory work to the abacus frame. The one disadvantage is that inexperienced users make mistakes. But that can happen in pencil arithmetic too.

The Chinese abacus has a center bar with rows of two beads above and rows of five beads below. All numbers are calculated from the center bar (which divides the two and five beads), and from right to left; and the answer is read left to right as traditionally taught in American schools. The beads are used to help keep track of the numbers beings used.

Each vertical row of beads represents a different multiple of 10 (1000, 100, 10, and 1). The white beads in every row below the center bar each stand for five of the unit. The beads must be pushed against the center bar to be counted.

To make numbers, bring the beads from the ends of the rows to the centerline. To add numbers, push the number of beads needed to the centerline. To subtract numbers, push the number of beads away from the centerline.

Procedure

1. Give background information and show the actual abacus to the students.
2. Let students make an abacus. This will take from 5 to 15 minutes, depending on whether students assemble from scratch.

(continued)

3. Once assembled, the student can practice with the abacus to make numbers. You may want students to break into small groups and work together.
4. Have students record their answers to the Discussion Questions and worksheets in their journal.

Discussion Questions:

1. Ask students what it's like to use an abacus. Has anyone in the class ever used an abacus before?
2. How hard/easy do students think using an abacus is?

Directions for making an Abacus

1. Enlarge and copy the abacus pattern onto oaktag or light cardboard.
2. Pinch together and fold, matching arrows as indicated.
3. Staple as indicated to secure fold.
4. Punch holes as indicated.
5. Cut pieces of string for each student. You may need to start each board with the string tied to the first hole.
6. Run string through bottom hole, thread with five white beads (or macaroni); run string through center hole and thread with two colored beads; run string through top hole.
7. IF USING MACARONI, put a small amount of rubbing alcohol in a dish and add food coloring. The more concentrated the coloring, the deeper the macaroni color.
8. Add macaroni and let sit a few minutes to absorb the color.
9. Remove the macaroni from the alcohol and spread out on paper towels to dry.
10. Continue until you have four complete rows.
11. Staple end of string firmly to hold in place.

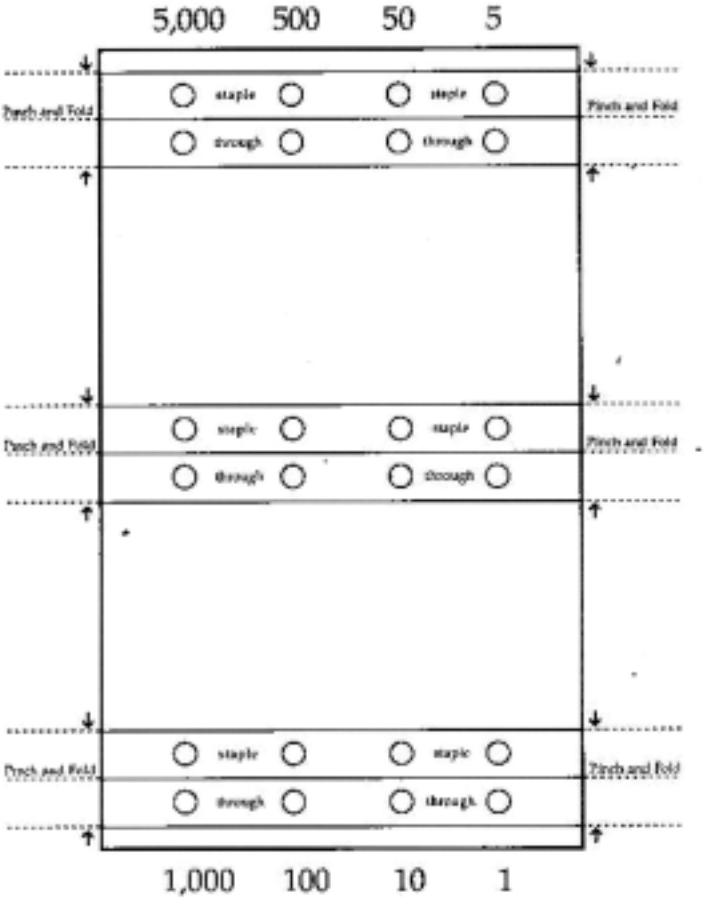

Worksheet One

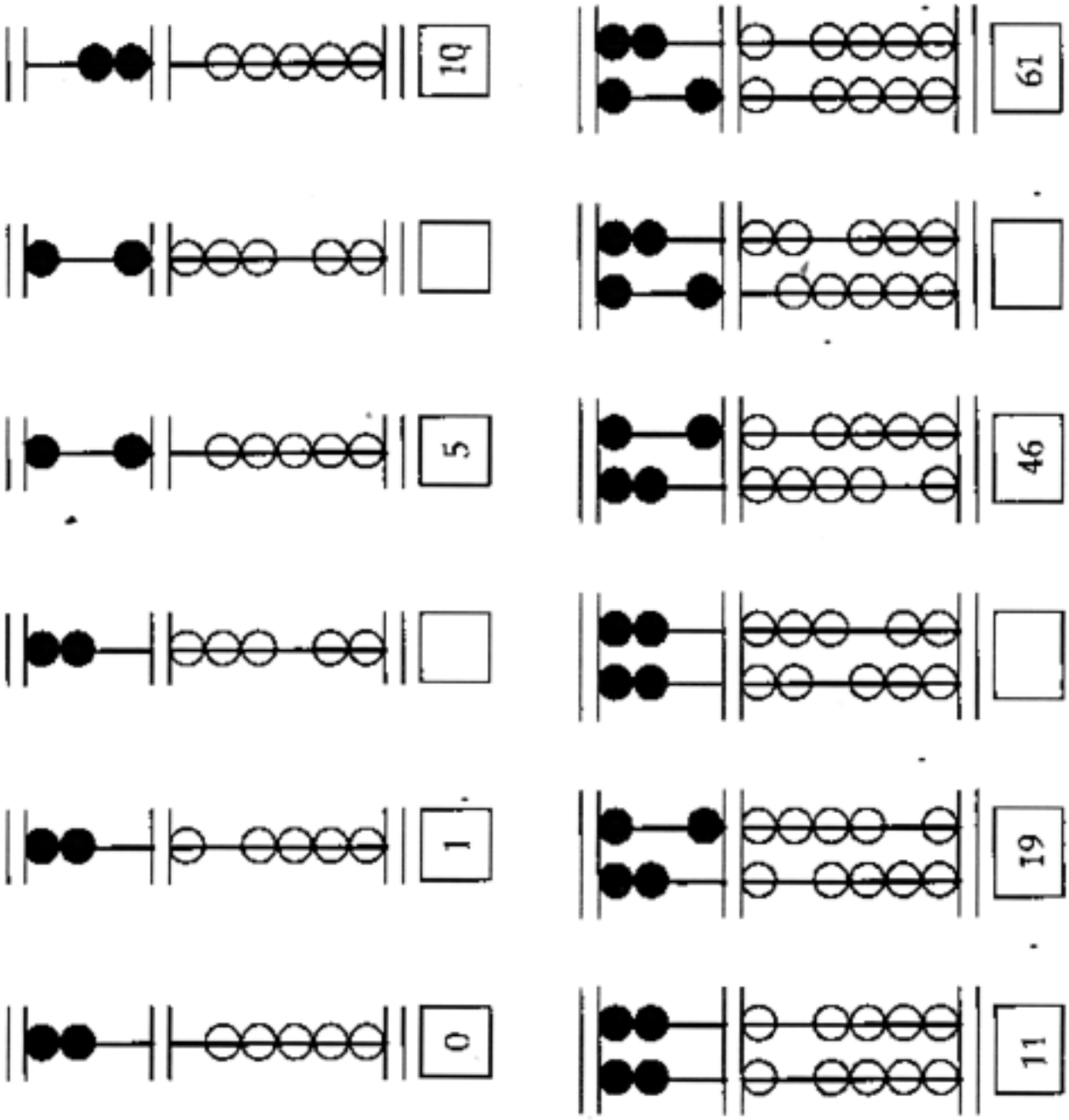

Worksheet Two

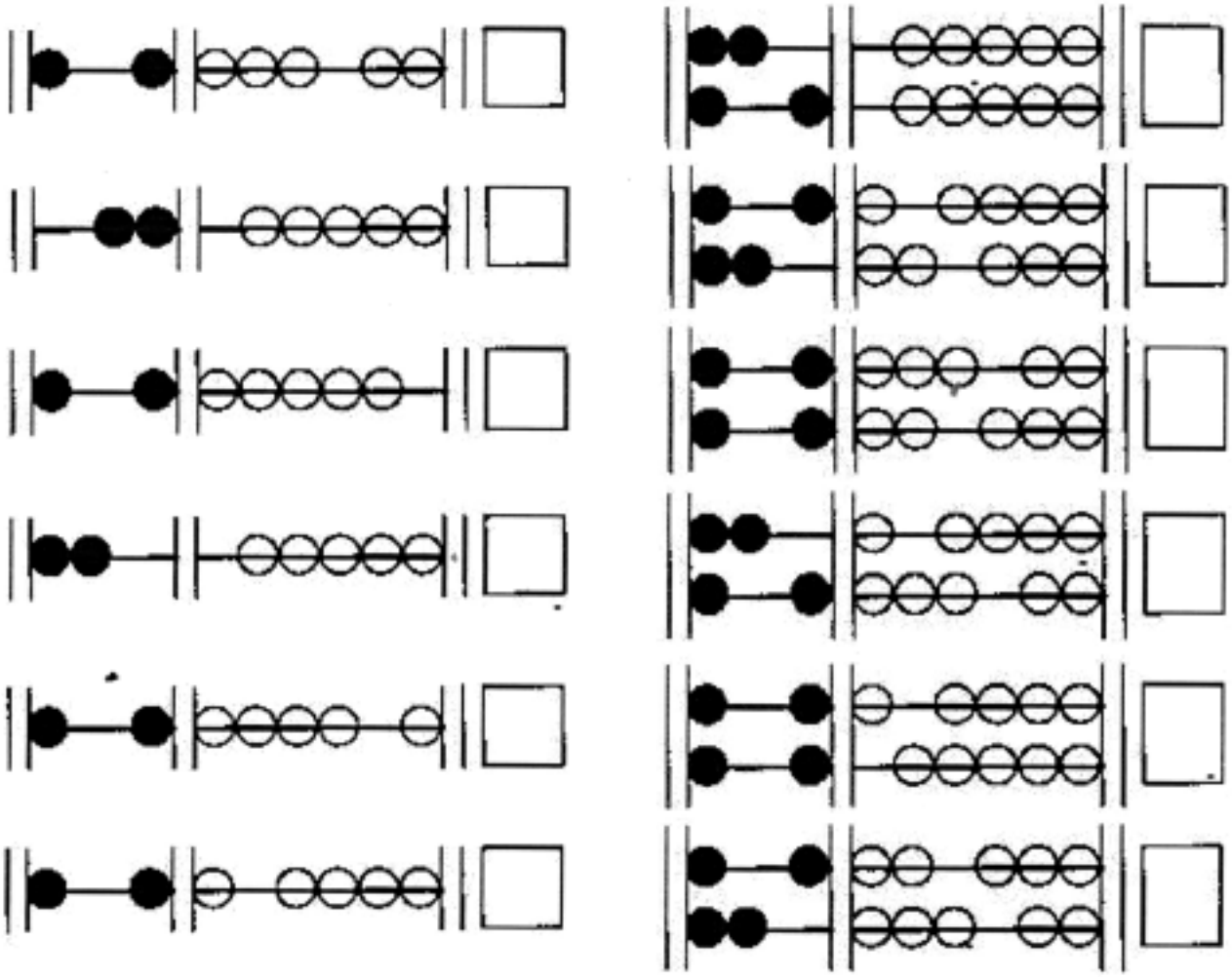

Answers to Worksheet One

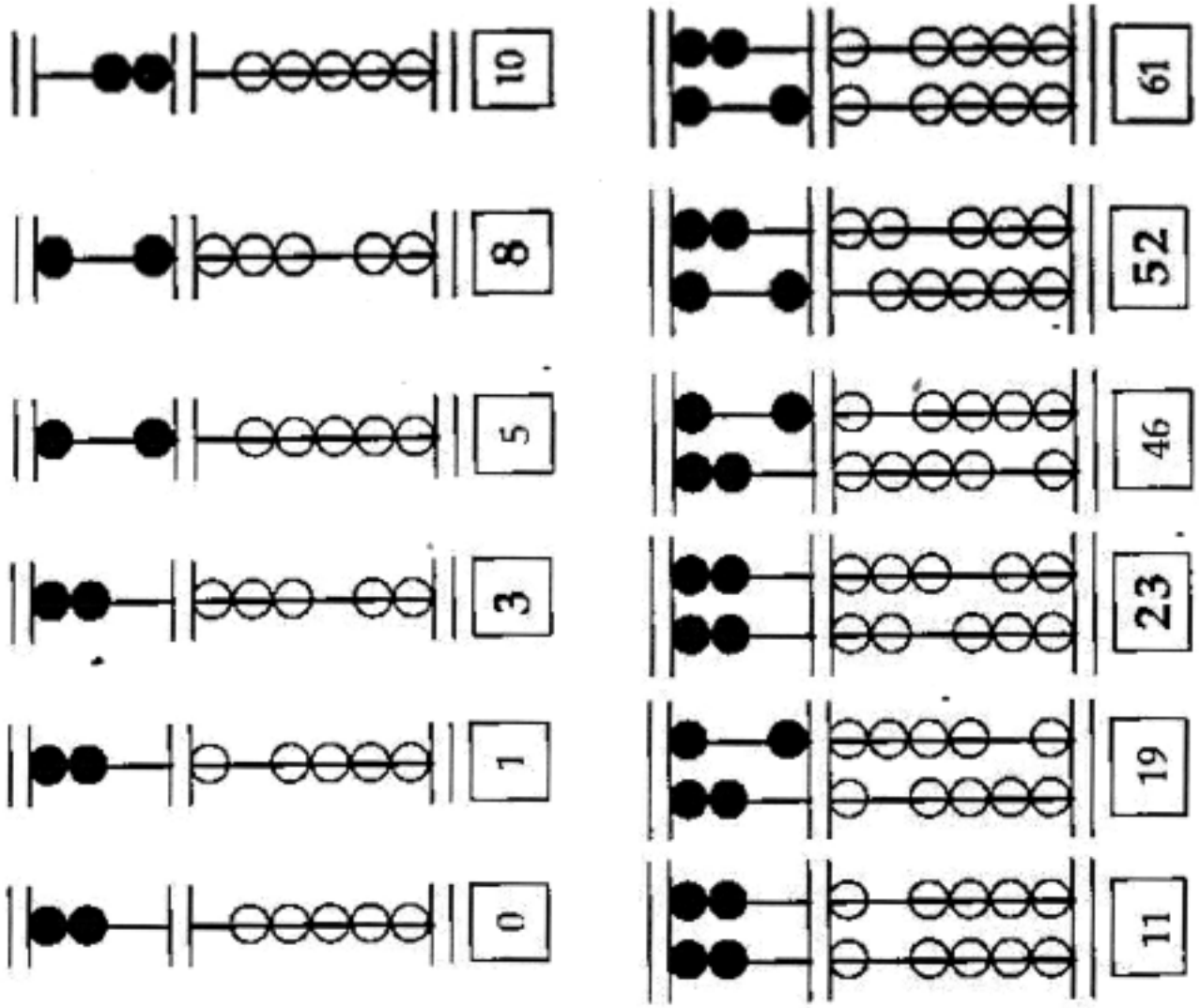

Answers to Worksheet Two

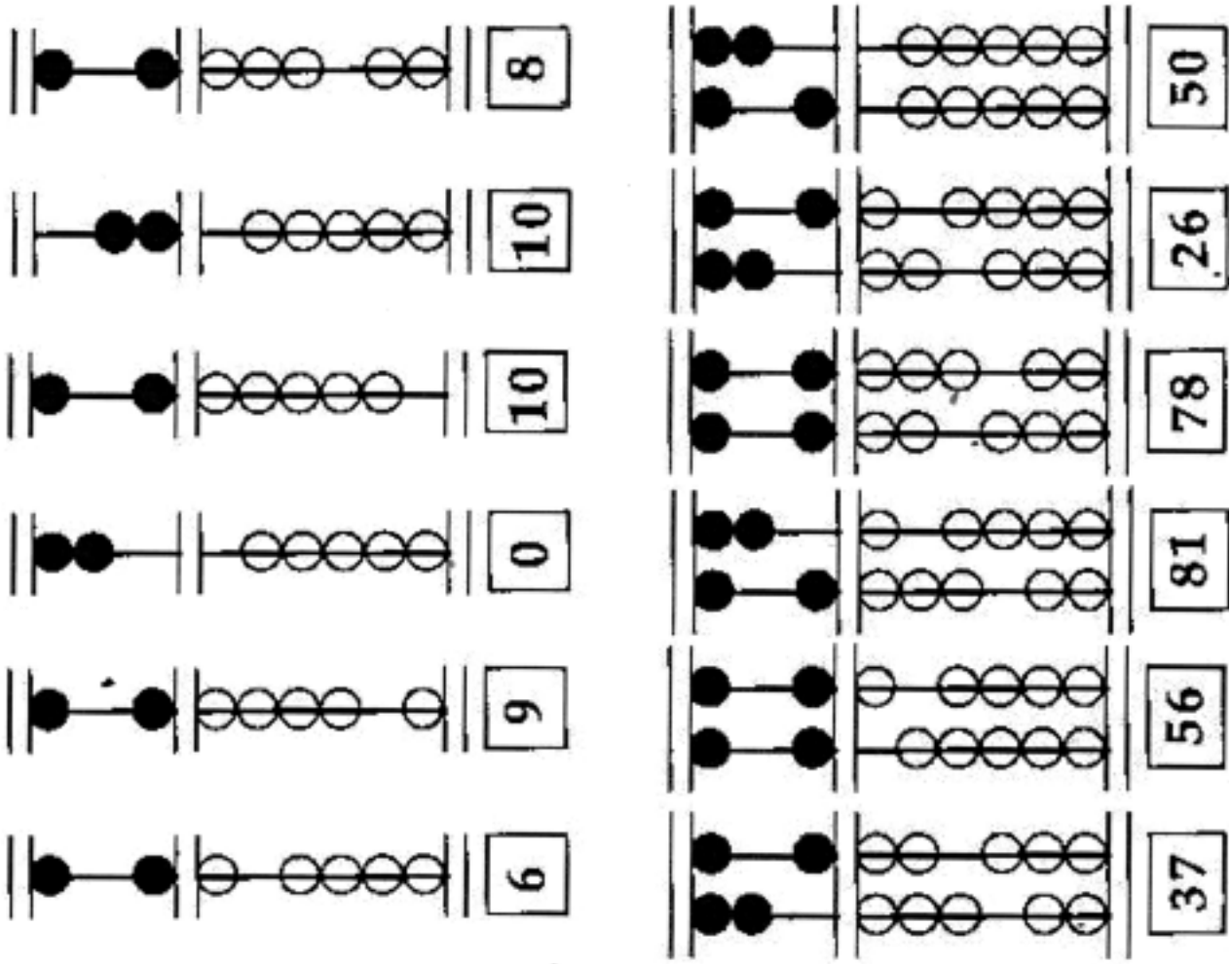

Lesson 9: Bound Feet

Adapted from Chinese Historical and Cultural Project, 1994.

Objectives

At the conclusion of the lesson students will be able to:

- discuss the custom of Chinese foot binding;
- demonstrate awareness that few Chinese women in American had bound feet, although in the early days wives of merchants usually did;
- compare foot binding with restrictive clothing in use today and in the past.

Time

One 45-50 class period.

Materials

- Footlocker Materials: lotus slippers, picture of bound feet in *Splendid Slippers* book
- User Guide Materials: "Those Doll-Sized Feet"
- Teacher Provided Materials: none

Pre-Lesson Preparation

In the tenth century in China, a prince began the practice of foot binding because he loved the small 'lily feet' of his concubine. Thus traditional Chinese values for over 1000 years dictated that the feet of young girls should be bound to keep them small. 'Lily feet', as they were called, were thought to be very dainty and beautiful and a symbol of gentility and high-class. Although the term sounded harmless, it was really very cruel. It began when a girl was between three and eleven years old. First her foot was washed in hot water and massaged. Then the child's toes were turned under and pressed against the bottom of her foot. The arches were broken as the foot was pulled straight with the leg, and a long narrow cotton bandage would be tightly wound around the foot from the toes to the ankle to hold the toes in place.

After two or three years, a girl's feet actually shrank -- until they could fit into shoes just three inches long. This resulted in feet that were very deformed and unbearably painful to walk on. Sometimes the toes even fell off, because blood could no longer reach them. Besides identifying women of high-class, it prevented women from "wandering," since a woman with bound feet was unable to walk unassisted, and even going a short distance was very painful. These women had to walk with very short mincing steps and could stand only with great difficulty.

Tiny 3-inch-long shoes, called 'lotus shoes', were made of silk and were beautifully embroidered. In the upper classes in China, a good marriage would be impossible to arrange if the girl had "big ugly feet." The practice of foot binding continued in China for over 1000 years until the Manchu Dynasty was toppled in 1911 and the new republic was formed. Foot binding was then outlawed.

Few Chinese women and girls who came to the United States had their feet bound as small children in China, but those who did had to spend their lives with the tiny useless feet. Women from the peasant and working classes did not have their feet bound as children because it was necessary for them to be able to work in the home and fields. As these were more frequently the women who came to America, most of the immigrant women did not have bound feet. (Chinese Historical and Cultural Project, 1994).

Procedure:

1. Read the introduction to this lesson to your class.
2. Ask one student to read "Those Doll-Sized Feet" out loud to the class.
3. Discuss why this was done. (Students must understand that this practice was discontinued about 80 years ago).
4. Show the picture of the bound feet and ask students how big they think women's feet were.
5. Show the lotus slippers to the class.
6. Have students record their answers to the Discussion Questions and Further Exploration topics in their journal.

Discussion Questions

1. What do students think of the now-discontinued practice of foot binding? What things could Chinese girls and women no longer do if their feet were bound?
2. Why do students think that Chinese men and women participated in the practice of foot binding?

Further Exploration

- Discuss the various types of restrictive clothing in our culture today, such as panty hose, platform or high-heeled shoes, neckties, tight clothing, etc. How are these items similar to and different from lily feet?
- Discuss restrictive clothing from the past and why it were used (primarily to make attractive). Hoop skirts, girdles, corsets, big hats, wigs, etc. Why are these types of clothing no longer in use?
- How do we as Americans make ourselves attractive? Discuss hair, makeup, body piercing, tattoos, etc. How have these things changed over the years? How are these similar to and different from lily feet?

Those Doll-Sized Feet...

By Jane Kam Pang

AhPo's house was next door to mine for the first decade of my life. For as long as I can remember, my mother and I spent a part of each day visiting her.

AhPo had seven children. My mother was the eldest. She sewed, she cleaned, she cooked, and she had those "doll-sized" feet. She was always clad in dark traditional Chinese pajamas, unless she 'went out'; then it was a long, dark cheongsam. Her long hair was pulled back to form a pug. Her skin, like my mother's, was almost flawless. And she always wore those small, small black leather shoes. Some were laced; others hand a narrow strap across the step.

Wooden stools were strategically placed around her kitchen so AhPo could kneel from ice-box to sink to table to stove, and not have to walk on those tiny feet of hers. Her knees were usually swollen or blistered. In the late afternoon. AhPo would hobble out to the back yard, carrying a big, big black pot to cook the evening's rice. She tended the fire, fueled with wood, while sitting on a small bench. I can still see that black, black pot that contained the whitest, hottest rice.

It was years later, when I saw her bare feet that I started to understand the effort and the pain that must have accompanied her every step. Her feet were smaller than my hands. The big toe was where it should be, but the other four toes were folded under the sole of the foot. The big toe and the heel of the foot were pushed very close together. The arch of the foot was very high.

When very young, about age six, girls like my grandmother had their feet bound. Long, narrow strips of cloth were wrapped in a figure eight over the instep, around the heel, under the foot. These bandages were tightened daily until the foot measured less than four inches.

Historically, some believe this practice started around the Sahng Dynasty. This extremely painful custom lasted over a thousand years. Mothers wished their daughters to be in a 'state of refinement and grace'. The swaying walk that necessarily developed was thought to be erotic and sensuous. Foot binding was beyond fashion. Words like feminine, sexy, dignified, fragile, delicate, gentle must be used to depict the qualities women hoped for with bound feet.

Although AhPo lived over 80 years, I do not remember her as being old or handicapped. She had a regal look and did all her household chores without the aid of computerized appliances. She was truly a lady by all standards -- yes, with those "doll-sized feet."

Crossword Puzzle

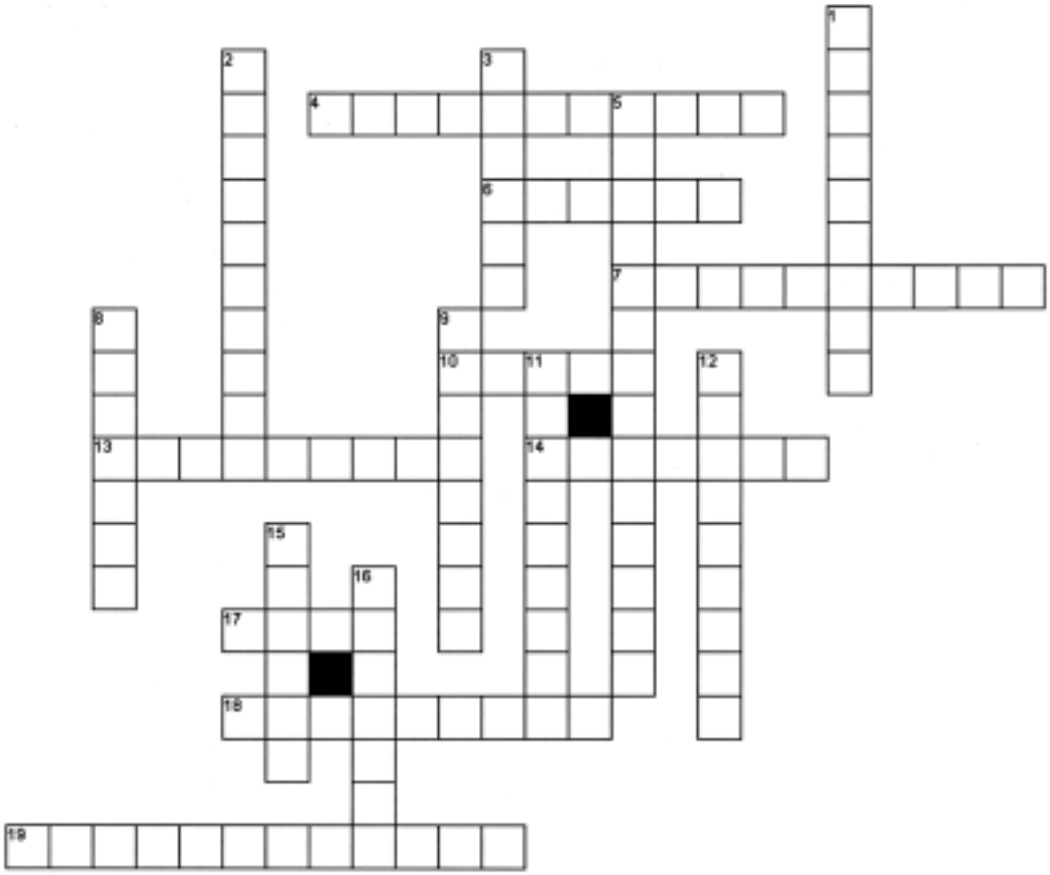

ACROSS

4. an old Chinese custom of wrapping a girl's feet so that they would not grow.
6. an official count of the population with details as to age, sex, occupation, age, and race.
7. confined or kept within limits.
10. the dried, condensed juice of a poppy flower, that has a narcotic effect, that was used as medicine.
13. a women who is a secondary wife to a married Chinese man.
14. walking or moving with short, affectedly dainty steps.
17. a group of people related by common descent or heredity.
18. "of gentle birth" and refinement; of upper-class status.
19. Getting minerals or metals such as gold from placers through washing.

DOWN

1. producing wealth, profitable.
2. addition, subtraction, multiplication or division
3. frame with beads sliding back and forth on wires or in slots, for doing or teaching arithmetic of the decimal system.
5. treatment of, or making a distinction in favor of or against, a person based on the group, class or race to which that person belongs.
8. to abstain from buying or using a product or something from particular individuals.
9. one's native land.
11. a person who has come to a foreign country to live.
12. the main Chinese district in any town outside of China.
15. A deposit of sand or soil containing eroded particles of precious minerals.
16. an unconverted individual or group that do not acknowledge the God of the Bible; not Christian.

Words Search

ABACUS
ARITHMETIC
BINDING
BOYCOTT
CENSUS
CHINATOWN
CONCUBINE
DISCRIMINATION
FOOT
GENTILITY
HEATHEN
HOMELAND
IMMIGRANT
LUCRATIVE
MINCING
MINING
OPIUM
PLACER
RACE
RESTRICTIVE

N	U	V	K	G	N	I	C	N	I	M	F	E	J	A
D	I	S	C	R	I	M	I	N	A	T	I	O	N	R
T	S	C	Y	P	E	B	B	R	A	C	J	I	S	I
N	O	U	O	T	R	S	E	O	H	N	H	A	U	T
A	P	H	C	I	I	C	T	I	Y	E	D	E	S	H
R	I	B	L	A	A	L	N	R	A	C	V	D	N	M
G	U	I	L	L	B	A	I	T	I	I	O	W	E	E
I	M	N	P	K	T	A	H	T	T	C	E	T	C	T
M	A	D	H	O	M	E	L	A	N	D	T	O	T	I
M	P	I	W	L	N	J	R	S	H	E	A	I	U	C
I	E	N	I	B	U	C	N	O	C	G	G	M	V	F
G	X	G	V	N	U	M	I	N	I	N	G	D	O	E
N	H	C	R	L	E	C	A	R	M	Z	O	O	T	W
C	S	G	Y	K	L	H	D	F	F	W	T	H	O	B
Q	D	T	O	C	D	Y	P	S	N	C	J	U	L	I

Make a Map Activity

Students make a map of the town that they live in to augment the letter they have written to their parents back in China.

- Teacher Provided Materials: copy of map of your city for each student, crayons, markers, pencils

Procedure (for two class periods):

1. Pass out copies of a map of your city. Using an overhead transparency or large city map, show students where your school is located.
2. Ask students to break into small groups of 3-4. In these groups have them make a list of the things they want on their map. Some things to consider might be where they work (school), their house, favorite places to go (movie theater, playground, friends' house, etc.). The list should include places they'd like their relatives in China to know about and to better understand them. Have them make a symbol for each thing they want on their map.
3. Have a class discussion concerning the places each group chose. Put all of the major places on your large map for everyone to see.
4. Utilizing the list they created in their small groups and the larger map, have each student create their own map by putting the symbols on the map where they belong.
5. Have students from different groups exchange maps to see what was most important to them to be included in their map.

The Chinese Exclusion Act

Objectives

- To assess the development of anti-Chinese bias in America during the latter half of the nineteenth century
- To examine the passage of anti-Chinese legislation by Congress in the 1880s

Notes to the Teacher

Throughout our history, immigrants from dozens of countries have entered the United States seeking freedom and prosperity. Hard-working and diligent, these newcomers often lived under the harshest, most difficult conditions and often performed jobs that the average American refused. Viewed by Americans as a threat to their livelihood, immigrants were often subject to harassment and abuse. Signs which read "No Irish Need Apply" (NINA) often appeared in the windows of businesses in cities along the Atlantic seaboard. Anti-immigrant groups, such as the Know-Nothings, became political powers in some sections of the United States. It was not surprising that the Chinese became a target of anti-immigrant bias during the late nineteenth century.

The acquisition of California during the Mexican War and the discovery of gold at Sutter's Mill in 1848 marked the beginning of the real settlement of the West. Thousands of would-be miners poured into the Sierra Nevadas in search of gold. While North America, South America, and Europe provided the bulk of the miners, some, like the Sydney Ducks (known for their brutal gang activities), came from as far away as Australia. The Chinese began to arrive during the Gold Rush, and by 1860, large numbers of Chinese were providing cheap labor for the construction of the western end of the transcontinental railroad. So many came that by the 1870s and 1880s American workers found themselves competing with Asian laborers for jobs. Bowing to pressure from the newly organized labor unions, Congress attempted to limit the number of Chinese workers immigrating to America by passing the Chinese Exclusion Act in 1882.

In this lesson, students read and analyze three sources: an example of a visual which illustrates the anti-Chinese bias in America at the end of the nineteenth century; an excerpt from the Knights of Labor pamphlet, which warns of the dangers of allowing the Chinese to continue to enter the United States; and excerpts from the Chinese Exclusion Act of 1882.

Reminder to Teachers

- Decide if the appropriate primary sources analysis worksheets from the appendix will be used in this lesson.
- Assign those sections of the basal textbook that are relevant to this lesson.

Procedure

1. Ask if students know what is required to allow an immigrant to enter the United States (*must have valid documents from his or her native country; must enter under the current immigration laws; may not be a criminal or mentally ill; may be granted refugee status depending on the circumstances in his or her native land*). Explain that before 1900, the United States encouraged immigrants to enter the country in order to provide workers for America's growing industries and settlers for the vast western lands. Explain that some immigrant groups were abused and mistreated. Briefly discuss the conditions that confronted the Irish when they came to the United States beginning around 1825. Lesson 4, "The Coming of the Irish," in *Primary Sources in U.S. History: Antebellum America and Civil War, 1840–1865* may be used to discuss the problems facing Irish immigrants fleeing the potato famine in the mid-1840s. Ask students who the Know-Nothings were (*a group of nativists who supported public policies that opposed the admission of Catholics, Jews, and other immigrants to the United States.*)
2. Explain that the Chinese began to arrive in the western United States at the time of the Gold Rush. They worked at diggings for other miners and operated restaurants and laundries. Later they worked on the construction of the Union Pacific half of the transcontinental railroad. Explain that an

(continued)

anti-Chinese movement began in California after the Civil War. Ask students why bias developed against the Chinese. (*They worked for lower wages than others, sent most of their money back to China, dressed differently, frequently did not speak English, and practiced a different religion than most Americans.*)

3. Distribute **Handout 9.** Have students examine part A and complete the analysis questions. Review students' responses.

Suggested Responses:

1. *The Chinese are threats to Americans and would resort to violence.*
2. *to illustrate the cover of a "pennie-dreadful"*
3. *The message is both verbal and visual. The Chinese are portrayed as thugs who have tied "white" Americans to stakes and are prepared to set them on fire.*
4. *The intended audience was young men and those whose jobs and livelihoods might be threatened by the Chinese.*
5. *The stereotypes included Chinese dressed in "pajamas" and the wearing of the que.*
6. *They portrayed the Chinese in a threatening and menacing way.*

4. Explain that labor unions were being organized for the first time during the 1880s and 1890s. Have students read part B and complete the questions for discussion. Review students' responses.

Suggested Responses:

1. *laundry*
2. *Their labor took "bread from the mouths of our women." The Chinese would work for lower wages and returned nothing to the economy or trade of the country.*
3. *It appealed to those things which most Americans believed were important.*
4. *because they were hard workers*
5. *They had an untiring industrial ability, an unsurpassed staying power, and a degree of patience which no other nation could pretend to equal.*

5. Explain that by the 1880s, anti-Chinese bias had become a major force in the politics of western America. Lobbyists in Congress demanded the passage of a Chinese exclusion law. In 1880, the first restrictions on Chinese immigration were enacted. Two years later, the Congress passed the Chinese Exclusion Act. Have students read part C and complete the questions for discussion. Review students' responses.

Suggested Responses:

1. *if it affected the interests of the United States or endangered the good order of the country*
2. *Chinese laborers*
3. *Chinese subjects and Chinese laborers who were already in the United States were allowed free passage.*
4. *The government promised to secure for them the rights, privileges, immunities, and exemptions that other citizens or subjects enjoy and that the treaty entitles to them.*
5. *ten years*
6. *The coming of Chinese laborers to the United States was suspended.*
7. *could not land or permit to land any Chinese laborers*
8. *a $500 fine for each laborer and up to one year in prison*
9. *any Chinese who entered the United States before November 17, 1880, or within ninety days of that date*
10. *a certificate including the following information: name, title, official rank, age, height, physical peculiarities, occupation/profession, residence in China*
11. *They would be deported.*
12. *Chinese diplomats would not be affected.*
13. *They were denied citizenship.*
14. *any skilled and unskilled laborers or Chinese employed in mining*

(continued)

6. Conclude by asking students to give examples of modern immigrant groups who have faced some of the same bias as the Chinese (*"boat people" from Southeast Asia, immigrants from Africa and the Middle East, immigrants from Central and South America*). Direct students to find examples of this in newspapers and magazines. Have students write a letter to the editor of their local newspaper describing the contributions of immigrants to American society. Pick selected students to share their letters.

Extension Activities

1. Have students research and report on the contributions of Chinese immigrants to American society.

2. Have a member of the local Chinese community speak to the class about the problems confronting recent immigrants.

3. Have students do further research and report to the class about the "pennie-dreadfuls." Suggest using the Web site of the Stanford University Library (http://www-sul.stanford.edu/depts/dp/pennies/1880_chinese.html) as a starting point.

Name _____

Date _____

Visual Images and the Chinese Exclusion

Part A.

An anti-Chinese bias developed during the last half of the nineteenth century. Dime novels were the reading material of choice for most Americans. The simple, often repetitious plots and colorful illustrations captured the eye of the average American, particularly young men and boys. The tendency of writers to stereotype the characters depicted, as they did in the case of their portrayal of the Chinese as individuals who spent their time in opium dens and abducting white women who would become addicted to the drug and be forced into prostitution, contributed to the development of an anti-Chinese bias in America. Examine the following example of a dime novel cover, and complete the analysis questions.

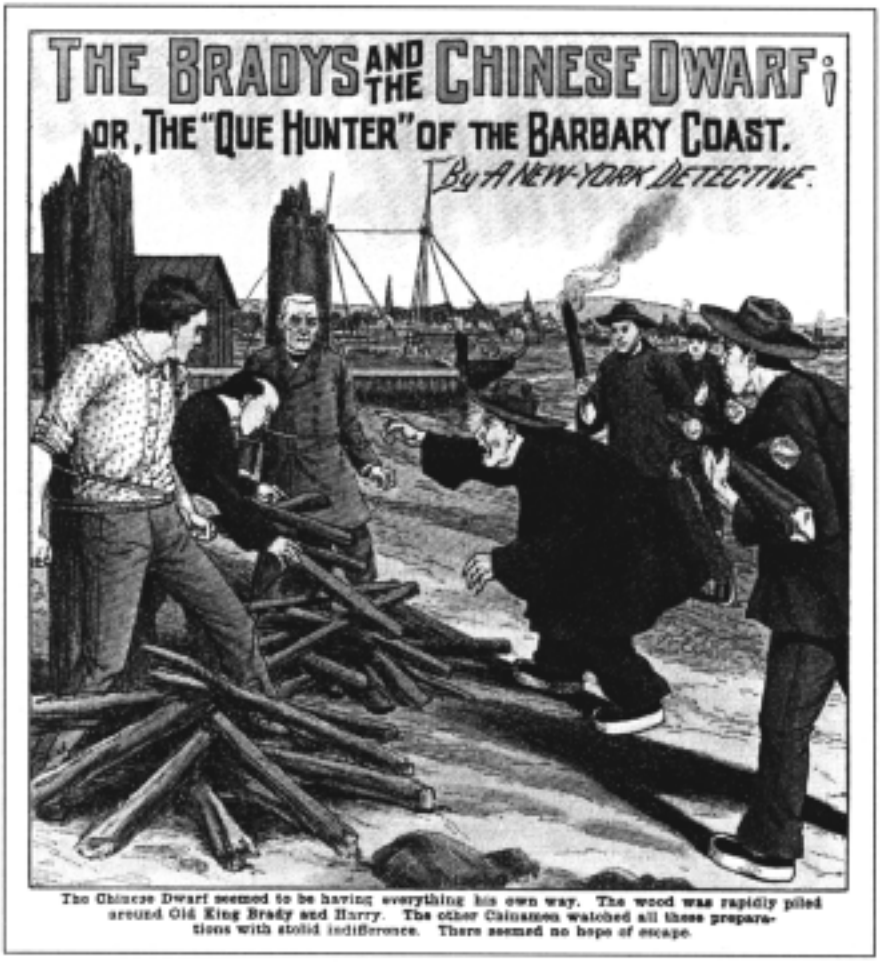

Fig. 4.1.

Fig. 4.1. *The Bradys and the Chinese Dwarf; or, The "Que Hunter" of the Barbary Coast, by a New-York Detective.* http://www-sul.stanford.edu/depts/dp/pennies/1880_chinese.html. Department of Special Collections, Stanford University Libraries.

© COPYRIGHT, The Center for Learning. Used with permission. Not for resale.

Name _____

Date _____

1. What is the message of the illustration?

2. What is its purpose?

3. Is the message more verbal or visual? Explain your answer.

4. Who do you think was the intended audience?

5. What stereotypic images appear in the illustration?

6. How did illustrations like this encourage anti-Chinese bias?

© COPYRIGHT, The Center for Learning. Used with permission. Not for resale.

Name _____

Date _____

Part B.

The early labor movements in America, such as the Knights of Labor, opposed the admission of Chinese immigrants to the United States on the grounds that they were taking jobs from "native" Americans. Read the following excerpt from an anti-Chinese pamphlet produced by a member of the Knights of Labor in 1878, and answer the questions that follow. Be prepared for class discussion.

China's Menace to the World

by Thomas Magee

MEN FROM CHINA come here to do LAUNDRY WORK. The Chinese Empire contains 600,000,000 (six hundred millions) inhabitants.

The supply of these men is inexhaustible.

Every one doing this work takes BREAD from the mouths of OUR WOMEN.

So many have come of late, that to keep at work, they are obliged to cut prices.

And now, we appeal to the public, asking them will they be partners to a deal which is only one of their many onward marches in CRUSHING OUT THE INDUSTRIES OF OUR COUNTRY from our people by grasping them themselves. Will you oblige the AMERICAN LAUNDRIES to CUT THE WAGES OF THEIR PEOPLE by giving your patronage to the CHINAMEN?

We invite you to give a thorough investigation of the STEAM LAUNDRY BUSINESS OF THE COUNTRY; in doing so you will find that not only does it GIVE EMPLOYMENT TO A VAST NUMBER OF WOMEN, but a great field of labor is opened to a great number of mechanics of all kinds whose wages are poured back into the trade of the country.

If this understandable element "THE CHINESE EMIGRANTS" are not stopped coming here, we have no alternative but that we will have California and the Pacific Slope's experience, and the end will be that our industries will be absorbed UNLESS we live down to their animal life.

We say in conclusion that the CHINAMAN is a labor consumer of our country without the adequate returns of prosperity to our land as is given by the labor of our people to our glorious country.

Our motto should be:

OUR COUNTRY, OUR PEOPLE, OUR GOD, AND OUR NATIVE LAND.

Pioneer Laundry Workers Assembly, K. of L. Washington, D.C. . . .

. . . China is no longer shut; China is open, and China's only grievance may be that the world, in its turn, may build an anti-Chinese legal wall against the entrance of her innumerable industrial armies. The world does not know much about China yet; it will soon, however, make more of her acquaintance. She has been hidden in the night of exclusion, oriental sleep, and mental stagnation; she is emerging into the daylight of progress, and toward an activity such as the modern world has never seen. China has been ignorantly despised, but China is worthy of all respect. She is quickly throwing off the clogs of her progress, and is rapidly coming up with the open world in the race of life, with advantages in her favor that cannot well be surpassed. The man who can run for a few minutes in a short race, and make very

© COPYRIGHT, The Center for Learning. Used with permission. Not for resale.

Name _____

Date _____

> fast time, is not the equal of him who can run all day. The Chinese are all-day runners, and those who compete with them will need to rise early and sit up late. China has untiring industrial ability, unsurpassed staying powers, and a degree of patience which no other nation can pretend to equal. Friend and enemy of China should know these facts. Few do know them.[1]

1. What job did the Chinese perform?

2. Why did the Knights of Labor oppose the entrance of more Chinese to America?

3. What is the appeal of the motto "Our country, our people, our God, and our native land"?

4. Why did Magee say that the Chinese were to be respected?

5. Why did Magee compare the Chinese to an all-day runner?

[1]Thomas Magee, *China's Menace to the World: From the Forum to the Public*, 1878. Library of Congress, Rare Book and Special Collections Division, Daniel A. P. Murray Pamphlets Collection.

© COPYRIGHT, The Center for Learning. Used with permission. Not for resale.

Name _____

Date _____

Part C.

In 1880, the U.S. Congress approved a treaty with China that restricted the immigration of Chinese to America. In 1882, Congress passed the Chinese Exclusion Act, which limited Chinese immigration to the United States. Read the following excerpts, and complete the questions for discussion.

Treaty Regulating Immigration from China
November 17, 1880

ART. I. Whenever in the opinion of the Government of the United States, the coming of Chinese laborers to the United States, or their residence therein, affects or threatens to affect the interests of that country, or to endanger the good order of the said country or of any locality within the territory thereof, the Government of China agrees that the Government of the United States may regulate, limit, or suspend such coming or residence, but may not absolutely prohibit it. The limitation or suspension shall be reasonable and shall apply only to Chinese who may go to the United States as laborers, other classes not being included in the limitations. Legislation taken in regard to Chinese laborers will be of such a character only as is necessary to enforce the regulation, limitation or suspension of immigration, and immigrants shall not be subject to personal maltreatment or abuse.

ART. II. Chinese subjects, whether proceeding to the United States as teachers, students, merchants, or from curiosity, together with their body and household servants, and Chinese laborers who are now in the United States, shall be allowed to go and come of their own free will and accord, and shall be accorded all the rights, privileges, immunities and exemptions which are accorded to the citizens and subjects of the most favored nation.

ART. III. If Chinese laborers, or Chinese of any other class, now either permanently or temporarily residing in the territory of the United States, meet with ill treatment at the hands of any other persons, the Government of the United States will exert all its power to devise measures for their protection and to secure to them the same rights, privileges, immunities and exemptions as may be enjoyed by the citizens or subjects of the most favored nation, and to which they are entitled by treaty. . . .[2]

1. Under what circumstances would Chinese immigration be restricted?

2. To whom did the restrictions apply?

[2]"Treaty Regulating Immigration from China," 17 November 1880, in *Treaties, Conventions, International Acts, Protocols and Agreements between the United States of America and Other Powers*, vol. 1, comp. William M. Malloy (Washington, D.C.: Government Printing Office, 1910), 237 ff.

© COPYRIGHT, The Center for Learning. Used with permission. Not for resale.

Name _____

Date _____

3. Who was allowed free passage to the United States?

4. How did the government promise to protect the Chinese?

Chinese Exclusion Act

May 6, 1882

An act to execute certain treaty stipulations relating to Chinese.

WHEREAS, in the opinion of the Government of the United States the coming of Chinese laborers to this country endangers the good order of certain localities within the territory thereof: Therefore,

Be it enacted, That from and after the expiration of ninety days next after the passage of this act, and until the expiration of ten years next after the passage of this act, the coming of Chinese laborers to the United States shall be . . . suspended; and during such suspension it shall not be lawful for any Chinese laborer to come, or, having so come after the expiration of said ninety days, to remain within the United States.

SEC. 2. That the master of any vessel who shall knowingly bring within the United States on such vessel, and land or permit to be landed, any Chinese laborer, from any foreign port or place, shall be deemed guilty of a misdemeanor, and on conviction thereof shall be punished by a fine of not more than five hundred dollars for each and every such Chinese laborer so brought, and may be also imprisoned for a term not exceeding one year.

SEC. 3. That the two foregoing sections shall not apply to Chinese laborers who were in the United States on the seventeenth day of November, eighteen hundred and eighty, or who shall have come into the same before the expiration of ninety days next after the passage of this act. . . .

SEC. 6. That in order to the faithful execution of articles one and two of the treaty in this act before mentioned, every Chinese person other than a laborer who may be entitled by said treaty and this act to come within the United States, and who shall be about to come to the United States, shall be identified as so entitled by the Chinese Government in each case, such identity to be evidenced by a certificate issued under the authority of said government, and which certificate shall be in the English language or (if not in the English language) accompanied by a translation into English, stating such right to come, and which certificate shall state the name, title, or official rank, if any, the age, height, and all physical peculiarities, former and present occupation or profession and place of residence in China of the person to whom the certificate is issued and that such person is entitled conformably to the treaty in this act mentioned to come within the United States. . . .

© COPYRIGHT, The Center for Learning. Used with permission. Not for resale.

Name _____

Date _____

SEC. 12. That no Chinese person shall be permitted to enter the United States by land without producing to the proper office of customs the certificate in this act required of Chinese persons seeking to land from a vessel. Any Chinese person found unlawfully within the United States shall be caused to be removed therefrom to the country from whence he came, by direction of the President of the United States, and at the cost of the United States, after being brought before some justice, judge, or commissioner of a court of the United States and found to be one not lawfully entitled to be or remain in the United States.

SEC. 13. That this act shall not apply to diplomatic and other officers of the Chinese Government traveling upon the business of that government, whose credentials shall be taken as equivalent to the certificate in this act mentioned, and shall exempt them and their body and household servants from the provisions of this act as to other Chinese persons.

SEC. 14. That hereafter no State court or court of the United States shall admit Chinese to citizenship; and all laws in conflict with this act are hereby repealed.

SEC. 15. That the words "Chinese laborers," whenever used in this act, shall be construed to mean both skilled and unskilled laborers and Chinese employed in mining.[3]

5. For how long was the treaty to be in effect?

6. What did the treaty suspend?

7. What restrictions were placed on ship's captains?

8. What punishment could result if the ship's captains violated the terms of the treaty?

9. Who was exempt under the terms of the treaty?

10. What was required of the Chinese government to regulate any other travelers?

11. What would happen to Chinese who are in the United States illegally?

12. How did the treaty affect Chinese diplomats?

13. What was to be the citizenship status of the Chinese?

14. How did the treaty define laborers?

[3]"Chinese Exclusion Act," 6 May 1882, 22 *Stat.* 58 ff.

© COPYRIGHT, The Center for Learning. Used with permission. Not for resale.

Choosing a Chinese Name 取名 Chyew Ming

In China, the family is considered more important than the individual. Therefore, when you say your name your family name comes before your personal name. Take the name ***Wang Syaodong***, for example. Wang is the family name and Syaodong is the personal name. Although there are 1.2 billion Chinese, there are only about a hundred family names in common use. The most popular family name in China is ***Li*** 李. About 87 million people or 8 percent of Chinese are named Li. The five most popular family names, accounting for 350 million people or almost 30 percent of the Chinese population, are Li, Wang, Djang, Liu, and Chen.

You can choose a Chinese name for yourself from the two lists of Chinese characters below. A Chinese name usually consists of three characters. First comes the one character that is your family name. Next come the two characters that are your personal name. (Some personal names are only one character, but most are two.) From the list of Chinese Family Names pick one that you like. You may choose one that sounds like all or part of your own family name. Then from the list of Chinese characters pick two characters that either sound like your own personal name or whose meaning you like. Put the three characters together and that is your Chinese name.

For Example: Let's say your name is ***James Jones***. For ***Jones*** you could pick the family name ***Jahng*** 张. For ***James*** you could pick the two characters ***Jie*** 杰 (hero) and ***Moo*** 大 (tree). So your Chinese name would be ***Jahng Jiemoo***. Let's say your name is ***Sally Bartow***. For ***Bartow*** you could pick the family name ***Bai*** 白 (White). For Sally you could pick the two characters ***Sha*** 纱 (gauze) and ***Li*** 丽 (beautiful). So your Chinese name would be ***Bai Shali***.

Chinese Family Names

An	安	Fan	樊	Huang	黄	Rao	饶
Ba	巴	Fang	方	Jahng	张	Ren	任
Bai	白	Fei	费	Jin	金	Shan	山
Bao	鲍	Feng	丰	Kang	康	Shen	沈
Bian	卞	Fu	富	Kong	孔	Shi	石
Bu	卜	Gai	盖	Li	李	Shu	舒
Cai	蔡	Gao	高	Liu	刘	Si	司
Cao	曹	Ge	革	Ma	马	Song	松
Chao	晁	Gong	公	Mao	毛	Sun	孙
Chen	陈	Gu	古	Mei	梅	Tao	陶
Chu	储	Guan	关	Miao	苗	Wang	王
Cong	丛	Gui	归	Nan	南	Wei	魏
Dai	戴	Guo	郭	Niu	牛	Wu	乌
Deng	邓	He	何	Pang	庞	Yang	杨
Ding	丁	Hou	侯	Peng	彭	Ye	叶

Personal Name Chinese Characters

Choose two to make your personal name

Ai	爱	love	Fa	法	law
An	安	peace	Fei	飞	to fly
Bai	白	white	Fei	绯	bright red
Bang	邦	nation	Feng	风	the wind
Bao	保	protect	Feng	凤	phoenix
Bao	豹	leopard	Foo	浮	float
Bin	宾	guest	Gan	敢	bold
Bing	兵	soldier	Gang	刚	strong
Bing	冰	ice	Ge	戈	dagger
Bun	本	root	Geng	耿	bright
Byao	彪	tiger cub	Goong	宫	palace
Byen	便	convenient	Gwang	光	bright
Chai	柴	firewood	Gwei	贵	precious
Chang	昌	prosperous	Hao	豪	special person
Cheng	诚	honest	He	和	gentle
Chi	池	pond	Hong	红	red
Choo	初	beginning	Hoo	虎	tiger
Chwan	川	river	Hwa	花	flower
Chwei	吹	blow	Hwang	晃	dazzle
Chwun	春	spring	Hwei	辉	brightness
Chwun	纯	pure	Hwei	惠	favor
Da	大	big	Jao	照	shine
Dahn	胆	courage	Jing	精	refined
Dai	带	belt	Jen	贞	loyal
De	德	virtue	Jeng	正	straight
Dee	笛	flute	Jeh	治	govern
Ding	定	calm	Jin	锦	beautiful
Djee	寂	quiet	Jong	中	center
Djia	佳	beautiful	Jong	钟	bell
Djiang	江	river	Joo	朱	bright red
Djyeh	杰	outstanding	Ke	刻	carve
Doong	冬	winter	Kwo	扩	expand
Dyen	颠	summit	Lai	赖	rely
Dzwun	尊	respect	Lang	朗	bright
En	恩	kindness	Lee	丽	beautiful

Lin	林	forest
Loo	鹿	deer
Lyen	莲	lotus
Lyang	良	good
Lyow	流	to flow
Mahn	满	full
Mei	美	beautiful
Mee	蜜	honey
Ming	明	bright
Myao	妙	wonderful
Neng	能	ability
Ping	屏	screen
Poo	朴	simple
Rong	荣	flourish
Rwei	锐	sharp
Sha	纱	gauze
Sheh	饰	decoration
Sheng	胜	victory
Shou	守	guard
Shwei	水	water
Soong	松	pine tree
Sun	森	full of trees
Tahn	坛	altar
Te	特	special
Tyeh	铁	iron
Tyeh	天	heaven
Wan	婉	gentle
Wei	威	strength
Wen	文	culture
Woo	乌	black
Yen	燕	swallow (bird)
Ying	樱	cherry
Yo	优	excellent
Yoo	玉	jade
Yuan	元	primary
Yueh	乐	music
Yung	勇	brave

Bibliography

Associated Chinese University Women. *Traditions for Living, A Booklet of Chinese Customs and Folk Practices in Hawaii*. Volume Two. Honolulu, 1989.

Chinn, Thomas. *Bridging the Pacific: San Francisco Chinatown and Its People*. San Francisco: Chinese Historical Society of America, 1989.

Dicker, Laverne Mau. *The Chinese in San Francisco: A Pictorial History*. New York: Dover Publications, Inc, 1979.

diFranco, Toni L. *Chinese Clothing and Theatrical Costumes*. San Joaquin, CA: San Joaquin County Historical Museum, 1981.

Pang-Mei Natasha Chang. *Bound Feet & Western Dress*. Anchor Books, 1997.

Pleasant Company Publications. *American Girl.* Middleton, WI. Article (Sampler, pg. 36), 1992.

Schubert, Barbara and Marlene Bird. *Chinese: A Book of Culturally Basic Activities for K-6 Children*. San Jose, CA: Reflections and Images, 1976.

Yu Young, Connie. *Chinatown, San Jose, USA*. San Jose, CA: San Jose Historical Museum Association, 1991.

Yung, Judy. *The Chinese Women of America: A Pictorial History.* Seattle and London: University of Washington Press, 1986.

Websites:

http://www.montana.com/maiwah/

http://www.butteamerica.com/oib.htm

http://www.dynastyantiques.com/2BoundFootShoes.html

http://depts.washington.edu/chinaciv/clothing/11qinwom.htm